LAKE PONTCHARTRAIN, LOUISIANA & VICINITY

LAKE PONTCHARTRAIN BARRIER PLAN

DM 2, SUPPL. 8

MODIFICATION OF PROTECTIVE ALINEMENT AND PERTINENT DESIGN INFORMATION I. H. N. C. REMAINING LEVEES WEST LEVEE VICINITY FRANCE ROAD AND FLORIDA AVENUE CONTAINERIZATION COMPLEX

DEPARTMENT OF THE ARMY

NEW ORLEANS DISTRICT, CORPS OF ENGINEERS

NEW ORLEANS, LOUISIANA

OCTOBER 1971

TG
7
.P6
dm 2
1971
suppl. 8

+DYNIX 270807

Serial No. 29

DEPARTMENT OF THE ARMY
NEW ORLEANS DISTRICT, CORPS OF ENGINEERS
P. O. BOX 60267
NEW ORLEANS, LOUISIANA 70160

IN REPLY REFER TO
LMNED-PP

29 October 1971

SUBJECT: Lake Pontchartrain, Louisiana and Vicinity, Lake Pontchartrain Barrier Plan, Design Memorandum No. 2, General - Supplement No. 8 - IHNC Remaining Levees

Division Engineer, Lower Mississippi Valley
ATTN: LMVED-TD

1. Submitted herewith is a report entitled "Modification of Protective Alinement and Pertinent Design Information, IHNC Remaining Levees, West Levee Vicinity France Road and Florida Avenue, Containerization Complex." This report presents a modification to the alinement submitted by LMNED-PP letter dated 22 December 1969 and approved by ENGCW-EZ 2d Ind thereto dated 11 March 1970, subject as above.

2. This report was prepared at the formal request of the Board of Commissioners of the Port of New Orleans (Dock Board) through the Board of Levee Commissioners of the Orleans Levee District (OLD), the agency designated to provide the required local cooperation for the Lake Pontchartrain hurricane protection project.

3. The OLD has further assured the Government of the Dock Board's willingness to bear all additional costs related to this modification as fully described in the text of this report.

4. It is recommended that the report presented herein be approved.

Richard L. Hunt

1 Incl (16 cys) fwd sep
as

RICHARD L. HUNT
Colonel, CE
District Engineer

MODIFICATION OF PROTECTIVE ALINEMENT
AND PERTINENT DESIGN INFORMATION
IHNC REMAINING LEVEES
WEST LEVEE VICINITY FRANCE ROAD AND FLORIDA AVENUE
CONTAINERIZATION COMPLEX

October 1971

MODIFICATION OF PROTECTIVE ALINEMENT
AND PERTINENT DESIGN INFORMATION
IHNC REMAINING LEVEES
WEST LEVEE VICINITY FRANCE ROAD AND FLORIDA AVENUE
CONTAINERIZATION COMPLEX

TABLE OF CONTENTS

Paragraph	Title	Page
	GENERAL	
1	General	1
2	Background information	1
3	Recommended plan	2
4	Cost distribution between Government and local interests	2
	GEOLOGY	
5	General	2
	SOILS AND FOUNDATION DESIGN	
6	General	2
7	Field investigation	4
8	Laboratory tests	4
9	Foundation conditions	4
10	Design and construction problems	4
11	Location and type of protection	5
12	Stability	5
	a. Cantilever I-type floodwall	5
	b. Sheet pile cutoff	5
	c. Levees	5
	d. Road ramp	7
13	Foundation of structures	7
14	Methods of construction	7
15	Fill material	7
	STRUCTURAL DESIGN	
16	General	7
17	Earthen levee	8
18	Gated structures	8
	ESTIMATE OF COST	
19	General	8
20	Comparison of estimates	9
	RECOMMENDATION	
21	Recommendation	10

TABLE OF CONTENTS (cont'd)

TABLES

No.	Title	Page
1	Cost distribution between Government and local interests	3
2	Location and type of protection	6
3	Estimate of first costs, recommended plan	11
4	Comparison of costs	13

PLATES

No.	Title
1	Previous alinements
2	Recommended plan
3	Soil and geologic profile, west levee
4	Cantilever sheet pile (S) stability
5	(Q) stability analysis, I-wall, protected side
6	(Q) stability analysis, I-wall, flood side
7	Unbalanced water load analysis
8	(Q) stability analysis, west levee, protected side
9	(Q) stability analysis, France Road ramp
10	Pile capacities and subgrade moduli, west levee
11	Plan and profile, west levee, sta. 206+16.73 to sta. 13+00
12	Plan and profile, west levee, sta. 13+00 to sta. 26+91.20
13	I-wall design analysis
14	Typical design sections
15	Gate details, gates 11W and 12W, west levee
A	Soil boring legend

APPENDIXES

APPENDIX A - CORRESPONDENCE WITH OTHER AGENCIES
APPENDIX B - DETAILED ESTIMATE OF FIRST COST FOR I-WALL PLAN & COMPARISON OF RECOMMENDED PLAN VERSUS I-WALL PLAN
APPENDIX C - DESIGN CALCULATIONS

MODIFICATION OF PROTECTIVE ALINEMENT
AND PERTINENT DESIGN INFORMATION
IHNC REMAINING LEVEES
WEST LEVEE VICINITY FRANCE ROAD AND FLORIDA AVENUE
CONTAINERIZATION COMPLEX

GENERAL

1. General. The purpose of this report is to present design and cost information required to support a revised alinement for that portion of the protective works on the west bank of the IHNC (Inner Harbor Navigation Canal) in the vicinity of France Road and Florida Avenue. The plan presented herein is a modification of the plan presented by LMNED-PP letter dated 22 December 1969 subject, "Lake Pontchartrain, La. and Vicinity, Lake Pontchartrain Barrier Plan, Design Memorandum No. 2, General, Supplement No. 8 - IHNC Remaining Levees, and approved by ENGCW-EZ 2d Ind thereto dated 11 March 1970[1]. The plan presented herein modifies the approved plan, at the request of local private interests, so the $6,000,000 containerized shipping facility now under construction would lie within the protective system. We have received assurances from the OLD (Board of Levee Commissioners of the Orleans Levee District), the local assuring agency for this feature of the project, that local interests will bear all additional costs resulting from said modification, to include all E&D, S&A, and first cost of construction in excess of the costs that would be borne by the Government in design and construction of the least-costly alternate. The change in alinement as presented herein was formally requested by the Dock Board (Board of Commissioners of the Port of New Orleans) through the OLD, and the Dock Board will ultimately provide the additional costs resulting from this modification. The Dock Board also requested that gated structures be provided across the ramps leading to the Berth No. 1 wharf in lieu of I-type floodwall, and has agreed to pay the added costs for constructing the gated structures. See appendix A for all related correspondence.

2. Background information. Plate 1 depicts previously presented alinements and the approved plan in the immediate vicinity of the containerized facility. As shown, the latest approved plan follows the same alinement as the project document plan with slight modifications in the type of protective works. Also shown on plate 1 is the plan presented in GDM No. 2, Supplement No. 8 - IHNC Remaining Levees, approved 6 June 1968. Although the project document and

---

[1]The plan submitted by LMNED-PP letter dated 22 Dec 69 subject, Lake Pontchartrain, La. and Vicinity, Lake Pontchartrain Barrier Plan, Design Memorandum No. 2, General, Supplement No. 8 - IHNC Remaining Levees, and approved by ENGCW-EZ 2d Ind thereto dated 11 Mar 70, will hereinafter be referred to as the approved plan.

GDM alinements differed, it was felt that the change was warranted in view of the fact that the containerized facility site would lie within the protective system. Subsequent to submittal of the GDM, local interests stated that a floodwall thus alined would impair access to the IHNC and then formally requested that the alinement be reverted to the project document alinement, with the stipulation that they would bear all additional costs for such reversion. The alinement was so modified and subsequently approved on 11 March 1970 as described above (reference LMNED-PP ltr dtd 22 Dec 69).

3. Recommended plan. The plan presented herein is illustrated on plate 2. Also presented on the plate is a tabulation of the protective works which comprise the plan. Note that the recommended plan includes gated structures from stations 16+89.83 to 17+99.33 and from stations 23+65.58 to 24+75.08. These structures have been included in the plan at the formal request of local interests who have agreed to bear the additional costs over that of providing I-type floodwall. To determine the additional cost of providing gated structures across the ramps leading to the wharf, an estimate was prepared for the smae plan as recommended herein with the exception that I-type wall was alined adjacent to the wharf. The I-wall estimate is shown in appendix B. Also presented in appendix B is a table comparing the recommended plan to the I-wall plan, subdivided by cost account numbers. As shown, the estimated additional cost for providing the gated structures is $90,000. Local interests have agreed to bear this difference in cost.

4. Cost distribution between Government and local interests. The cost distribution describing the Government's and local interests' responsibility for costs relating to this and previous reports is shown on table 1, page 3.

GEOLOGY

5. General. The geology along the recommended alinement is essentially the same as that described on pages III-1, III-2, III-3, and plate III-2 of GDM No. 2, Supplement No. 8, approved 6 June 1968. The soil and geologic profile for the recommended alinement is shown on plate 3.

SOILS AND FOUNDATION DESIGN

6. General. This section covers the soils and foundation design for the protective works from station 206+16.73 to station

TABLE 1
COST DISTRIBUTION BETWEEN GOVERNMENT AND LOCAL INTERESTS
CONTAINERIZATION COMPLEX

Item No.	Description	Cost ($)	Cost borne by
1	Preparation of GDM #2, Supp. #8 - IHNC Remaining Levees	N/A	Government
2	Approved plan (LMNED-PP ltr rept dtd 22 Dec 69 approved 11 Mar 70)	33,000	Local interests
3	Plans and specifications for item 2 above	54,000	Local interests
4	Preparation of current transmittal	15,000(est)[1]	Local interests
5	Additional first cost of construction of gated structures across ramps to wharf	90,000(est)[1,2]	Local interests
6	Plans and specifications for item 4 above	N/A	Government

[1]These figures represent estimated costs for completing the respective items. Actual costs computed upon final completion will be used in determining local interest obligations in cost sharing.

[2]Local interests have agreed to pay the difference in cost of constructing I-type floodwall and gated structures across the ramps leading to the newly-constructed wharf.

207+24.7=0+00, and station 0+00 to station 26+78±. The following information pertinent to this report is included in GDM No. 2, Supplement No. 8, approved 6 June 1968:

	Page	Plate
Geology	III-1, III-2, III-3	III-2
Borings		III-51, IV-33
Testing	III-4	
Settlement	III-19	
Subgrade moduli		III-45
Erosion protection	III-20	
Settlement observations	III-21	
Stability		III-27

7. Field investigation. The previously made borings that apply to this report are 34-WU, G-1, G-2, G-3, G-4, and G-5. The general type boring logs (G-1 to G-5) are presented on plate IV-33 and the undisturbed boring log (34-WU) and data are presented on plate III-51 of GDM No. 2, Supplement No. 8.

8. Laboratory tests. The results of the soil tests performed on the general type and undisturbed borings are shown on the respective logs as described in the preceding paragraph.

9. Foundation conditions. The subsurface along the alinement presented herein consists of approximately 8 to 15 feet of fill material overlying about 60 feet of Recent deposits. These Recent deposits generally consist of clays with varying amounts of organic materials, some silts, and sand. The top of the Pleistocene soil is located at approximately elevation -63[2] at the northern end of the alinement near France Road, and at elevation -70 at the southern end near Florida Avenue.

10. Design and construction problems. The principal design problem consisted of utilizing the existing levees and sheet piling. The recommended alinement parallels the IHNC between station 16+58.38 and station 26+78±. A pier for handling containerized cargo has been constructed by local interests, and any alterations of the existing bank under the pier would prove extremely difficult. The principal construction problem consists of building the required protection utilizing the existing levee and I-wall in the vicinity of the containerized cargo pier.

---

[2]Unless otherwise noted, all elevations presented herein are in feet and refer to mean sea level (m.s.l.) datum.

11. Location and type of protection. Specific data relative to the location of the protection are shown on table 2, page 6. The type of protection generally consists of earthen levee between France Road and the IHNC, and a combination sheet pile I-wall and levee along the pier to the end of the project at station 26+78±. T-wall is utilized in conjunction with the gate structures at the two pier entrances and at the railroad crossing near France Road.

12. Stability.

a. Cantilever I-type floodwall. The stability and required penetration of the steel sheet pile below ground surface were determined by the method of planes for both the (Q) and (S) shear strength cases. The latter governed the design. A factor of safety of 1.50 was applied to the design shear strengths as follows:

$$\emptyset' = \emptyset \text{ developed} = \tan^{-1} \frac{(\tan \emptyset \text{ available})}{(\text{factor of safety})}$$

$$C' = C \text{ developed} = \frac{(C \text{ available})}{(\text{factor of safety})}$$

The required depths of penetration were determined for a hurricane water level 6 inches below the top of wall on the flood side, and a water level equal to the water table on the protected side. The results of these analyses, (S) case, are presented on plate 4. A conventional stability analysis of the levee, with the I-wall, was made for the (Q) condition. The result of this analysis is given on plates 5 and 6.

b. Sheet pile cutoff. The existing Z-27 steel sheet pile was utilized under the gates and T-wall as a cutoff. Unbalanced water load analyses were performed on this existing sheet pile. The results are presented on plate 7. The net pressure diagrams indicated that the total available horizontal resistance is in excess of the total horizontal water load. Therefore, the bearing piles are not required to carry any additional lateral load resulting from water pressure acting on the sheet pile cutoff.

c. Levees. Stability of the earthen levee was investigated by the method of planes based on a minimum factor of safety of 1.3 with respect to shear strength using the (Q) design shear strengths indicated on the stability analyses drawings. An analysis was run for both the flood side and the protected side. The protected side analysis is presented on plate 8. The flood side analysis was presented on plate III-27 of GDM No. 2, Supplement No. 8. Both analyses yielded factors of safety equal to 1.3 or greater.

TABLE 2
LOCATION AND TYPE OF PROTECTION
CONTAINERIZATION COMPLEX

Location along centerline from station to station	I-wall Top elev.	I-wall Sheet pile tip elev.	T-wall Top elev.	T-wall Sheet pile tip elev.	Gate No.	Gate Top of gate	Gate Sheet pile tip elev.	Earthen levee Crest elev.	Earthen levee Type
206+16.73-206+86.70	15.0	-10.0							
206+86.70-207+24.70=0+00			14.0	-10.0					
0+00-0+40.78					10W	14.0	-10.0 -17.5		
0+40.78-0+64.30	15.0	-10.0							
0+64.30-1+07.00								14.5	Compacted shell ramp with clay core
1+07.00-16+58.38								15.0	semi-compacted fill
16+58.38-16+89.83	15.0	-10.0							
16+89.83-17+99.33					11W	14.0	-10.0		
17+99.33-23+65.58	15.0	-10.0							
23+65.58-24+75.08					12W	14.0	-10.0		
24+75.08-26+78±	15.0	-10.0							

d. Road ramp. A road ramp is included in the protection at France Road. The stability of the road ramp was computed assuming failure towards the railroad. The results of this stability analysis are shown on plate 9. The factor of safety is above the required 1.3.

13. Foundation of structures. Pile bearing capacities for the gated structures and T-walls were determined from the pile test performed at site 1 of the IHNC West Levee, Florida Avenue to IHNC Lock project, where subsurface conditions are similar to those at the proposed site of the T-wall and gates. Results of this test were obtained from the Pile Test Report, September 1967, and are presented on plate 10. Results are given in terms of ultimate load versus tip elevation. Design loads should be multiplied by the proper safety factor, 1.75 for compression and 2.0 for tension, before using the graph. Subgrade moduli for the bearing piles are also shown on plate 10.

14. Methods of construction. The location of existing steel sheet piling and earthen levees is shown on plates 11 and 12. The earthwork required along the project consists of shaping and rehandling existing material, placing additional fill on the existing levee and the earth levee portion around the I-wall, and raising the France Road ramp which was constructed by local interests. The structural work consists of extending the existing I-wall in the vicinity of the railroad tracks near France Road, constructing new I-wall near the containerization complex pier and the IHNC utilizing the existing sheet piling, and constructing the T-walls and gates at the container pier and at the railroad crossing near France Road. Where earth filling is required, the fill will be placed using semi-compacted methods in advance of installation of the steel sheet piling and wall construction in order to reduce the ultimate settlement of the walls.

15. Fill material. Borrow sources for fill material are discussed in paragraph 1a(3), 4th Ind to LMNED-PP letter dated 28 February 1968 subject, "Lake Pontchartrain, La. and Vicinity, Lake Pontchartrain Barrier Plan, Design Memorandum No. 2, General - Supplement No. 8 - IHNC Remaining Levees." Since the required amount of hauled fill is small, the Bonnet Carre' Spillway borrow source is recommended for use.

STRUCTURAL DESIGN

16. General. The protective works consist of I-wall constructed in earthen levee between stations 206+16.73 and 206+86.70, T-wall with a swing gate between stations 206+86.70 and 0+40.78 (sta. 207+24.70=0+00), I-wall in earthen levee between stations 0+40.78 and 0+64.30, a shell ramp at France Road between stations 0+64.30 and 1+07, earthen levee between stations 1+07 and 16+58.38, and I-wall in earthen levee between stations 16+58.38 and 26+78±,

the project terminus. In addition, two gated structures are provided at local interests' request between stations 16+89.83 and 17+99.33, and between stations 23+65.58 and 24+75.08. The plan and profile of the protective works are shown on plates 11 and 12. The I-wall design analysis is depicted on plate 13. Typical design sections for the protective works are shown on plate 14. Gate 10W remains as depicted on plates IV-50 and IV-51 of GDM No. 2, Supplement No. 8. Plate 15 shows details of the gated structures that cross the concrete ramps leading to the wharf area. The succeeding two paragraphs provide supplemental information and explain variations in the types of protection germane to this alinement.

17. Earthen levee. The ground on both sides of the earthen levee, north of the site, has been built-up in excess of the minimum berm elevations required. Local interests have furnished the Government assurances that the existing surcharge placed on both sides of the earthen levee would not be disturbed below elevation 6.0. Because of the additional fill material in the area and the desire of local interests to utilize the maximum land area at the site, an average ground elevation of 3.5 was mutually acceptable between parties to facilitate establishing a theoretical toe for the levee and to set rights-of-way limits. This surcharge reduced the rights-of-way required by 80 feet. (See appendix A for related correspondence.) The centerline of the existing levee has been shifted 3.5 feet to the north between station 1+07.00 and station 14+50.00 and between 3.5 feet and 10.0 feet to the north between station 14+50.00 and station 16+58.33. The existing clay core remains within the levee undisturbed throughout the length of the shifted position.

18. Gated structures. At the request of local interests, gated structures will be provided across the ramps leading to the wharf. The geometry of this site dictates the use of low profile gates (approximately 3 feet high) with a large clear span (45 feet). The gates will be constructed by welding the skin plate, supported by vertical ribs, to a standard W shape. Heavy duty swivel casters will be used to support the gate and to move it in and out of the closed position when necessary. Inverted angles supported by W shapes will be used as tracks to guide and aid in positioning the gate. Adjustable horizontal seal and stationary vertical side seals will be used to secure the gate against leakage when in the closed position. Refer to plate 15 for gate details.

ESTIMATE OF COST

19. General. Based on 1 July 1971 price levels, the estimated cost for recommended containerization complex protection plan is $931,000. This estimate consists of $194,000 for lands, $66,000 for relocations, $552,000 for levees and floodwalls, $65,000 for engineering and design, and $54,000 for supervision and administration. The detailed estimate of first cost is shown on table 3, pages 11 & 12.

DISPOSITION FORM

For use of this form, see AR 340-15; the proponent agency is The Adjutant General's Office.

REFERENCE OR OFFICE SYMBOL	SUBJECT
LMNED-PP	Modification of Protective Alinement & Pertinent Design Information-IHNC Remaining Levees, West Levee Vic. France Road and Florida Avenue Containerization Complex

TO	FROM	DATE	CMT 1
SEE DISTRIBUTION	Ch, Engrg Divn	4 Nov 71 Mr.Chenevert/jlf/430	

1. Inclosed for your information and use is a copy of the subject report.

2. Comments of higher authority will be furnished when they are made available.

1 Incl

BAEHR

DISTRIBUTION:
Ch, Real Estate Divn
Ch, Constr Divn
Ch, Oprns Divn
Ch, Prog Dev Ofc
Value Engr
Area Engr, NO/AO

File

DA FORM 1 FEB 62 2496 REPLACES DD FORM 96, EXISTING SUPPLIES OF WHICH WILL BE ISSUED AND USED UNTIL 1 FEB 63 UNLESS SOONER EXHAUSTED.

☆GPO: 1971 O - 426-725

20. Comparison of estimates.

a. The current estimate of $931,000 for the plan recommended herein represents a decrease of $137,000 when compared to the latest PB-3 effectove 1 July 1971. The estimate presented in the PB-3 is based on the estimate for the approved plan (LMNED-PP letter dated 22 December 1969, approved 11 March 1970) escalated to reflect July 1971 price levels. Table 4, page 13, shows a comparison of the approved plan, PB-3, and the recommended plan estimates. Reasons for the difference between the recommended plan and the PB-3 estimates are as follows:

(1) Lands. The net increase of $67,000 is due to the additional requirement of approximately 1.4 acres of land for rights-of-way as a result of modifying the protective alinement.

(2) Relocations. The net increase of $28,700 is due to an increase in the number of items to be relocated as a result of modifying the protective alinement.

(3) Levees and floodwalls. The net decrease of $196,200 is comprised of a decrease of $275,200 as a result of modifying the protective alinement and an increase of $79,000 for providing gated structures in the wharf area in lieu of I-wall. Local inteests have agreed to bear the added cost of providing these structures.

(4) Engineering and design. The net decrease of $15,000 is comprised of a decrease of $19,300 as a result of computing the estimate of actual engineering and design work required for the new protective alinement and an increase of $4,300 of engineering and design costs for providing the gated structures in lieu of I-wall. Local interests have agreed to bear the added cost of engineering and design for providing these structures.

(5) Supervision and administration. The net decrease of $21,500 is comprised of a decrease of $28,200 as a result of computing the estimate of actual supervision and administration work required for the new protective alinement and an increase of $6,700 of supervision and administration costs for providing the gated structures in lieu of I-wall. Local interests have agreed to bear the added cost of supervision and administration for providing these structures.

b. The current estimate of $931,000 for the plan recommended herein represents an increase of $5,000 when compared to the approved plan estimate. Reasons for the difference between the recommended plan and the approved plan estimates are as follows:

(1) Lands. The net increase of $84,000 is comprised of an increase of $67,000 as described in paragraph 20a(1) above, and an increase of $17,000 due to price level differences between November 1969 and July 1971.

(2) Relocations. The net increase of $34,000 is comprised of an increase of $28,700 as described in paragraph 20a(2) above, and $5,300 due to price level differences between November 1969 and July 1971.

(3) Levees and floodwalls. The net decrease of $90,000 is comprised of a decrease of $196,200 as described in paragraph 20a(3) above, and an increase of $106,200 due to price level differences between November 1969 and July 1971.

(4) Engineering and design. The net decrease of $8,000 is comprised of a decrease of $15,000 as described in paragraph 20a(4) above, and an increase of $7,000 due to price level differences between November 1969 and July 1971.

(5) Supervision and administration. The net decrease of $15,000 is comprised of a decrease of $21,500 as described in paragraph 20a(5) above, and an increase of $6,500 due to price level differences between November 1969 and July 1971.

RECOMMENDATION

21. Recommendation. It is recommended that the plan presented herein be approved. Local interests have agreed to bear all additional costs related to this alinement modification including the additional costs of providing gated structures across ramps leading to the newly constructed wharf.

TABLE 3
CONTAINERIZATION COMPLEX
ESTIMATE OF FIRST COSTS
RECOMMENDED PLAN
July 1971 price levels

Cost acct. No.	Item No.	Description	Estimated quantity	Unit	Unit price	Estimated amount
					$	$
01		Lands and damages				
	1	West of France Road	1.04	acre	8,000.00	8,320.00
	2	East of France Road	3.84	acre	40,000.00	153,600.00
		Subtotal				161,920.00
		Contingencies 20%±				32,080.00
01		Total cost lands & damages				194,000.00
02		Relocations				
	3	16" gas line			L.S.	5,515.00
	4	16" water line			L.S.	1,950.00
	5	Construct manhole and relocate drain pipe			L.S.	250.00
	6	Remove and replace N.O.P.B. railroad track for falsework			L.S.	262.00
	7	France Road ramp			L.S.	46,793.00
		Subtotal				54,770.00[1]
		Engineering and design 11.7%± (based on estimate of actual work required)				6,400.00
		Supervision & administration 8.8%± (based on estimate of actual work required)				4,830.00
02		Total cost relocations				66,000.00

[1]This amount represents the actual cost of relocations which have been completed by the OLD.

TABLE 3 (cont'd)

Cost acct. No.	Item No.	Description	Estimated quantity	Unit	Unit price	Estimated amount
					$	$
11		Levees and floodwalls				
	8	Levee fill	40,000	cu.yd.	3.50	140,000.00
	9	Z-27 steel sheet piling	27,000	s.f.	5.00	135,000.00
	10	12"x12" prestressed concrete piling	5,880	l.f.	8.50	49,980.00
	11	Concrete in stabilization slab	10	c.y.	45.00	450.00
	12	Concrete in T-wall base	305	c.y.	45.00	13,725.00
	13	Concrete in walls and columns	550	c.y.	80.00	44,000.00
	14	Portland cement	1,250	bbl.	6.00	7,500.00
	15	Reinforcing steel	79,400	lb.	0.18	14,292.00
	16	Waterstop (3-bulb type)	510	l.f.	4.00	2,040.00
	17	Waterstop (L-type)	100	l.f.	4.00	400.00
	18	Expansion joint filler	690	s.f.	1.00	690.00
	19	Gate seals	140	l.f.	7.50	1,050.00
	20	Structural steel	19,000	lb.	1.00	19,000.00
	21	Structural excavation	700	c.y.	3.50	2,450.00
	22	Structural backfill	400	c.y.	2.50	1,000.00
	23	Fertilizing and seeding	3.27	acre	200.00	654.00
	24	Clearing and grubbing	4.02	acre	500.00	2,010.00
	25	Cutoff trench	5,200	c.y.	3.50	18,200.00
	26	Hinges	2	ea.	100.00	200.00
	27	Casters, heavy duty 6"	12	ea.	100.00	1,200.00
	28	Gate guides	10	ea.	150.00	1,500.00
	29	Latching handles	6	ea.	50.00	300.00
	30	Miscellaneous metals	5,200	lb.	0.75	3,900.00
	31	Tear out existing concrete	23	c.y.	25.00	575.00
		Subtotal				460,116.00
		Contingencies 20%±				91,884.00
11		Subtotal levees and floodwalls				552,000.00
30		Engineering and design, 12.8%±(based on estimate of actual work reqd)				65,000.00
31		Supervision & administration 9.8%±(based on estimate of actual work reqd)				54,000.00
11		Total levees and floodwalls				671,000.00[2]
		Total project cost				931,000.00

[2]This includes $167,785 for work previously accomplished by the OLD.

TABLE 4
COMPARISON OF COSTS
CONTAINERIZATION COMPLEX

Acct. No.	Feature	Approved plan[1]	PB-3 eff. 1 Jul 71	Recommended plan[2]	Diff.recommended plan--PB-3	Diff.recommende plan--approved
		$	$	$	$	$
01	Lands and damages	110,000	127,000	194,000	67,000	84,000
02	Relocations	32,000	37,300	66,000	28,700	34,000
	Subtotal	142,000	164,300	263,000	98,700	121,000
11	Levees and floodwalls	642,000	748,200	552,000	-196,200	-90,000
30	Engineering & design	73,000	80,000	65,000	-15,000	-8,000
31	Supervision & administration	69,000	75,500	54,000	-21,500	-15,000
	Subtotal	784,000	903,700	671,000	-232,700	-113,000
	Total	926,000	1,068,000	931,000	-137,000	5,000

[1]November 1969 price levels
[2]July 1971 price levels

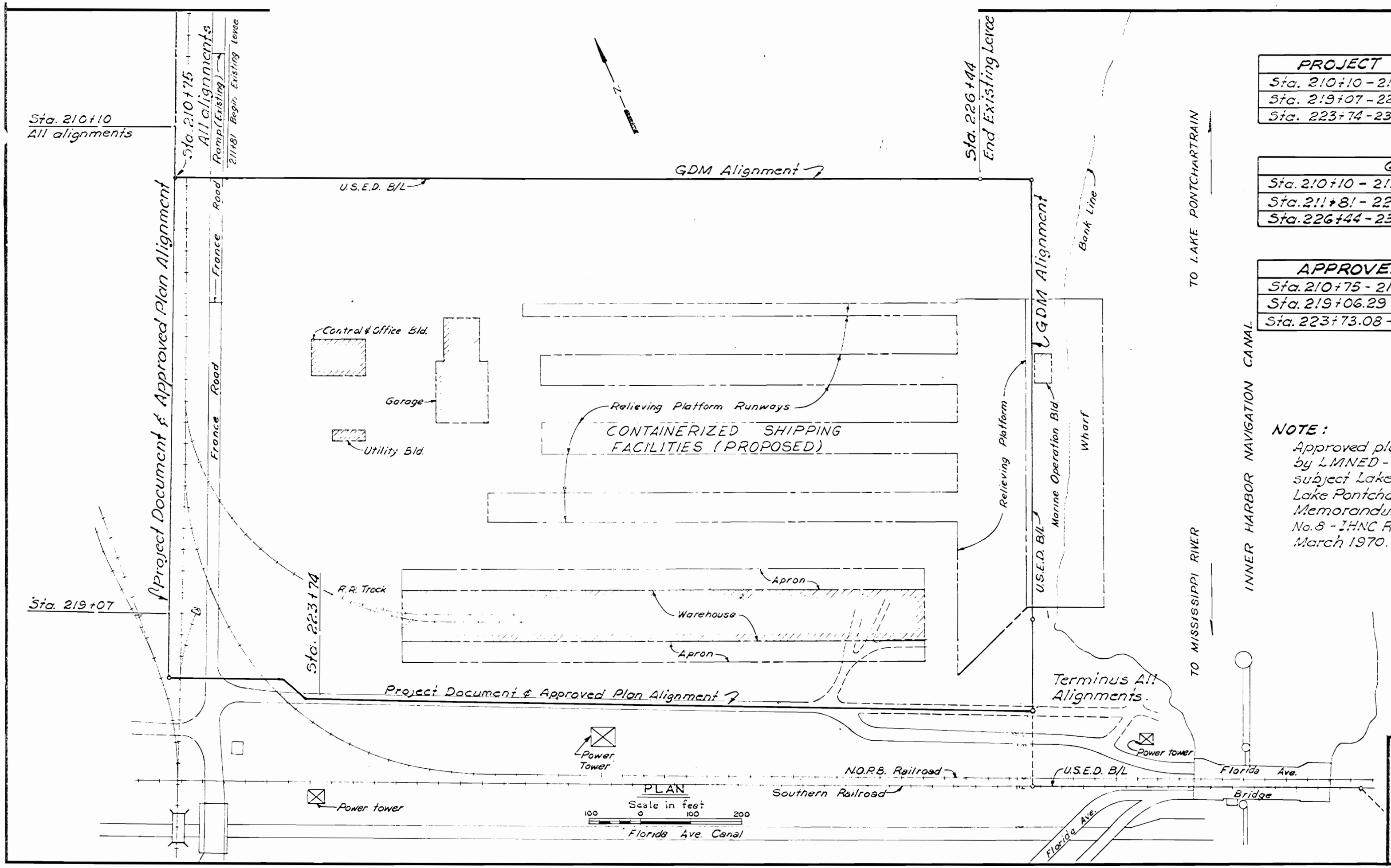

PROJECT DOCUMENT PLAN
Sta. 210+10 - 219+07 "I" Wall w/Levee
Sta. 219+07 - 223+74 "T" Wall, 3 Gates
Sta. 223+74 - 237+43 Earthen Levee & "I" Wall w/Levee

GDM PLAN
Sta. 210+10 - 211+81 "T" Wall, Gate, Ramp
Sta. 211+81 - 226+44 Earth Levee
Sta. 226+44 - 237+55 "T" Wall

APPROVED PLAN (SEE NOTE)
Sta. 210+75 - 219+06.29 "I" Wall w/Levee
Sta. 219+06.29 - 223+73.08 "T" Wall, 3 Gates
Sta. 223+73.08 - 237+42.51 "I" Wall, w/Levee

NOTE:

Approved plan refers to plan submitted by LMNED-PP letter dated 22 Dec. 1969, subject Lake Pontchartrain, La. and Vicinity, Lake Pontchartrain Barrier Plan, Design Memorandum No. 2, General-Supplement No. 8 - IHNC Remaining Levees, approved 11 March 1970.

LAKE PONTCHARTRAIN, LA. AND VICINITY
LAKE PONTCHARTRAIN BARRIER PLAN
DESIGN MEMORANDUM NO 2 - GENERAL DESIGN
SUPPLEMENT NO. 8
IHNC REMAINING LEVEES

PREVIOUS ALINEMENTS

WEST LEVEE

U. S. ARMY ENGINEER DISTRICT, NEW ORLEANS
CORPS OF ENGINEERS

OCTOBER 1971 FILE NO. H-2-25872

PLATE

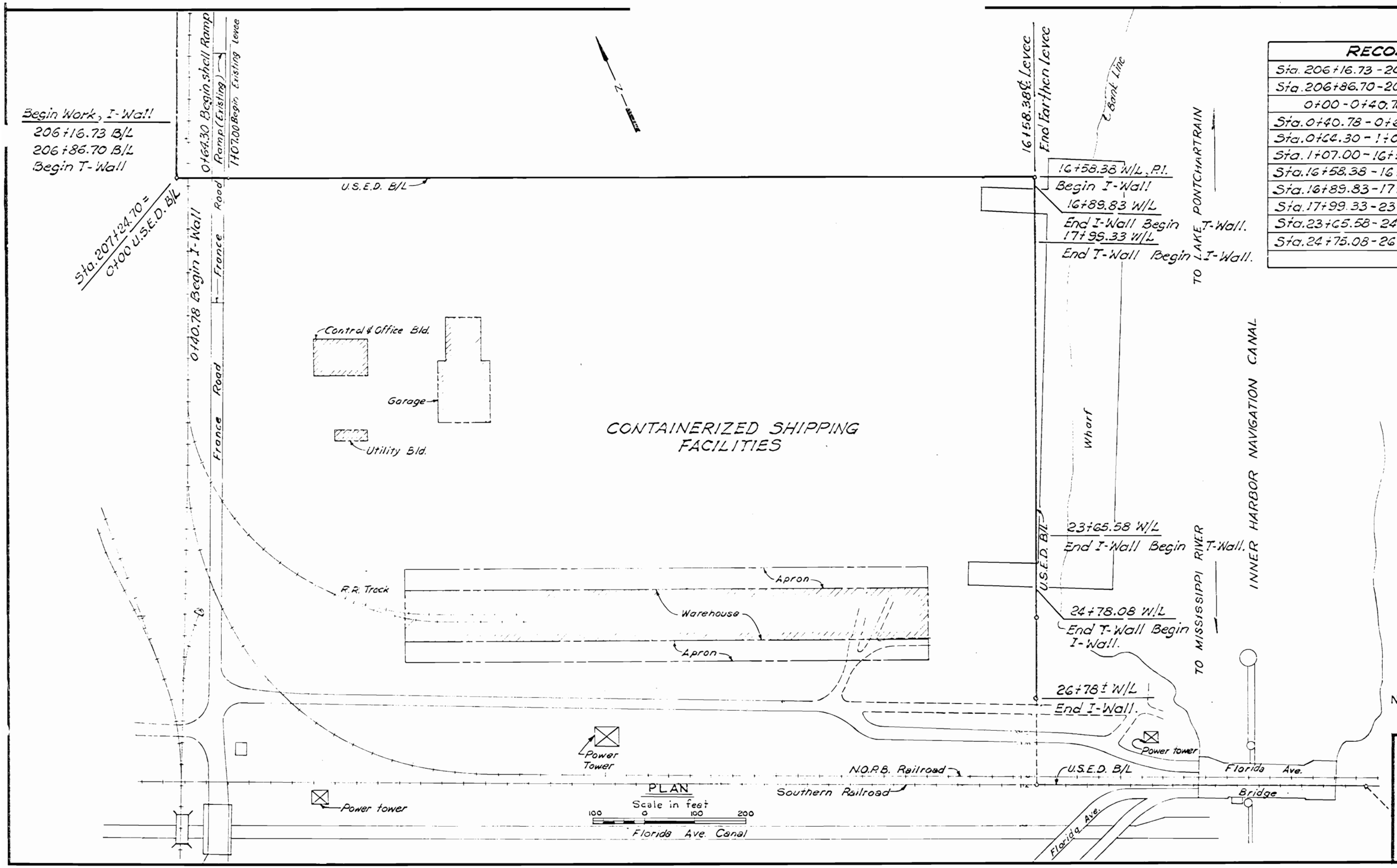

RECOMMENDED PLAN
Sta. 206+16.73 - 206+86.70 "I" Wall w/Levee
Sta. 206+86.70 - 207+24.70 = 0+00
0+00 - 0+40.78 T-Wall w/swing gate
Sta. 0+40.78 - 0+64.30 I-Wall w/Levee
Sta. 0+64.30 - 1+07.00 Shell Ramp (France Road)
Sta. 1+07.00 - 16+58.38 Earthen Levee
Sta. 16+58.38 - 16+89.83 I-Wall w/Levee
Sta. 16+89.83 - 17+99.33 Gated Structure
Sta. 17+99.33 - 23+65.58 I-Wall w/Levee
Sta. 23+65.58 - 24+75.08 Gated Structure
Sta. 24+75.08 - 26+78± I-Wall w/Levee

NOTE:
SEE PLATES 11 AND 12 FOR LOCATION OF BORINGS.

LAKE PONTCHARTRAIN, LA. AND VICINITY
LAKE PONTCHARTRAIN BARRIER PLAN
DESIGN MEMORANDUM NO 2 – GENERAL DESIGN
SUPPLEMENT NO. 8
IHNC REMAINING LEVEES

RECOMMENDED PLAN

WEST LEVEE

U. S. ARMY ENGINEER DISTRICT, NEW ORLEANS
CORPS OF ENGINEERS

OCTOBER 1971 FILE NO. H-2-25872

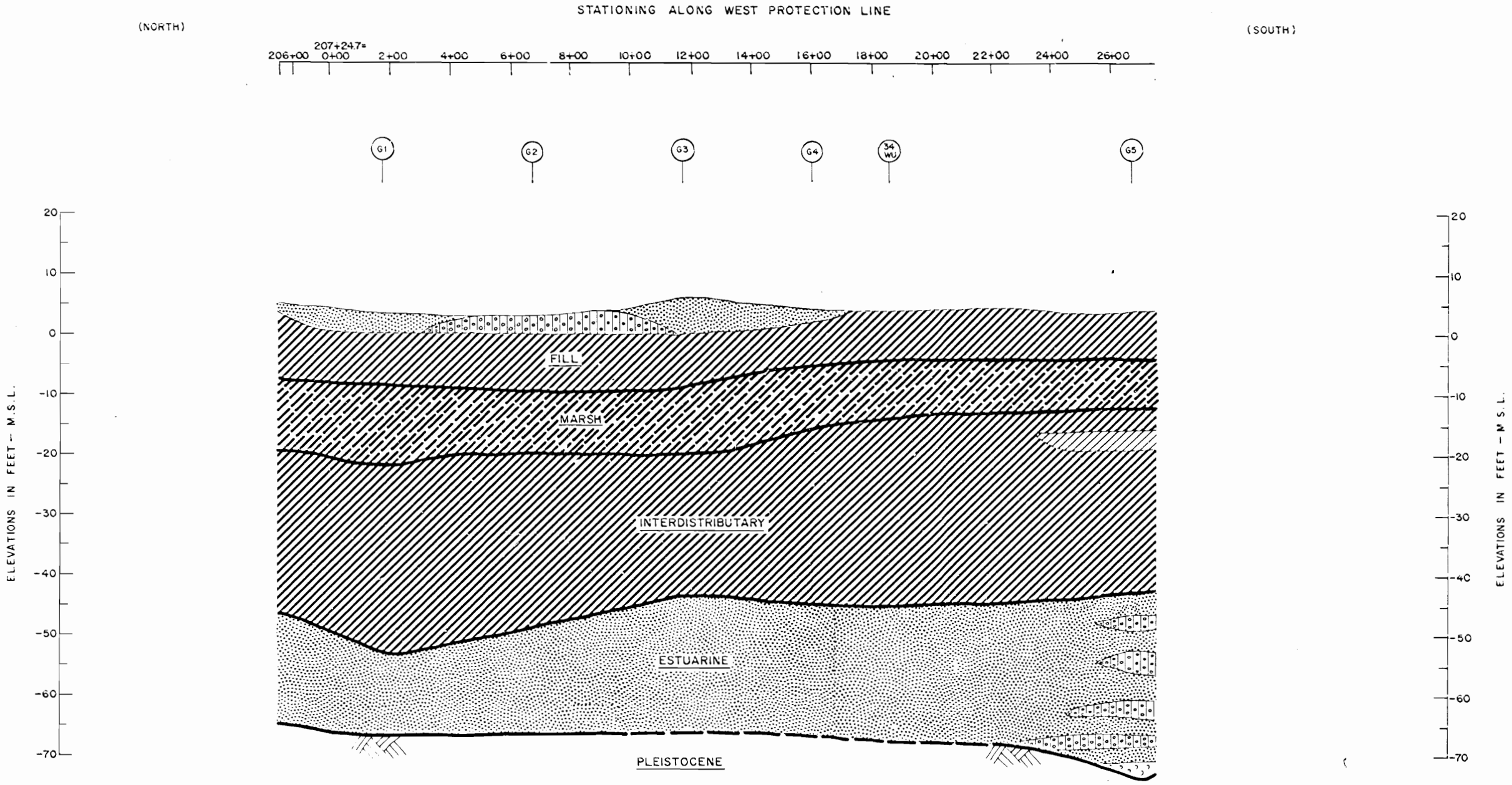

LEGEND

- CH – Fat clay
- CHO – Fat clay with organic matter and peat
- CL – Lean clay
- ML – Silt
- SM – Silty sand
- SP – Fine sand
- Sl – Shell
- Pleistocene Horizon

NATURAL LEVEE – soft to stiff clays with lenses and layers of silt

MARSH – very soft clays with organic matter and peat

INTERDISTRIBUTARY – very soft to soft clays with lenses and layers of silt and sand

ESTUARINE – sand, clay and silt with shell and shell fragments

LAKE PONTCHARTRAIN, LA AND VICINITY
LAKE PONTCHARTRAIN BARRIER PLAN
DESIGN MEMORANDUM NO. 2–GENERAL DESIGN
SUPPLEMENT NO. 8
IHNC REMAINING LEVEES

SOIL AND GEOLOGIC PROFILE WEST LEVEE

U.S. ARMY ENGINEER DISTRICT, NEW ORLEANS
CORPS OF ENGINEERS

OCTOBER 1971 FILE NO. H-2-25872

PLATE 3

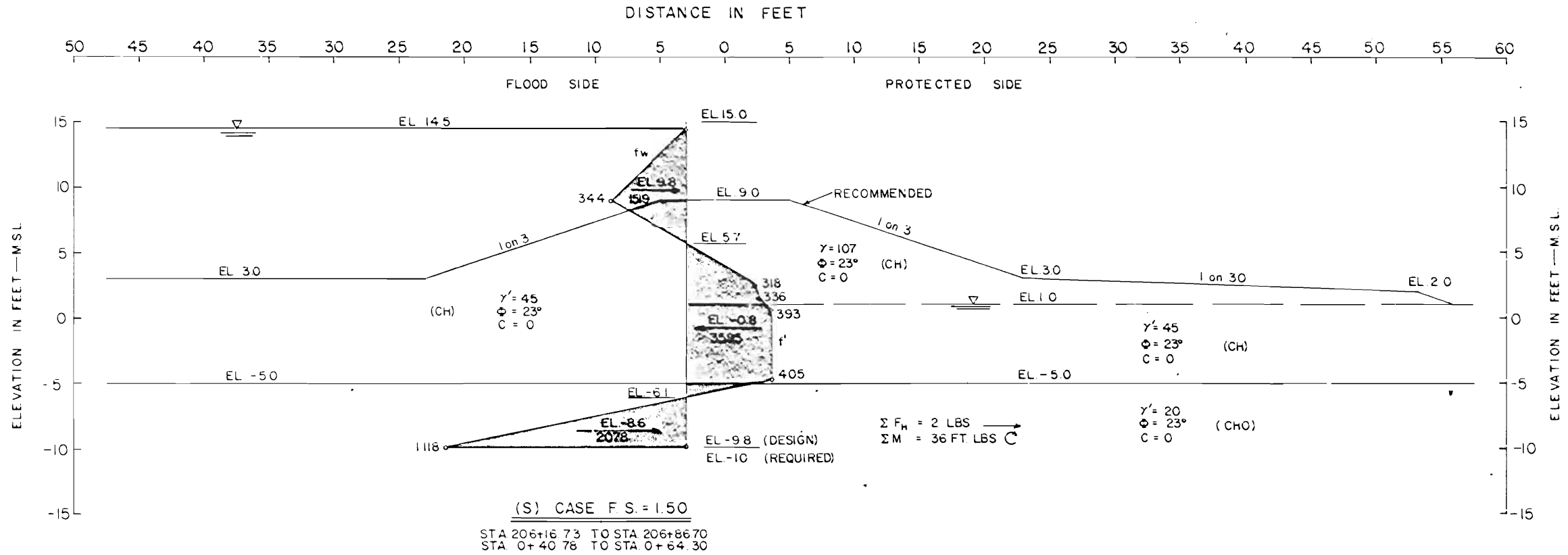

(S) CASE F.S. = 1.50

STA 206+16.73 TO STA 206+86.70
STA 0+40.78 TO STA 0+64.30

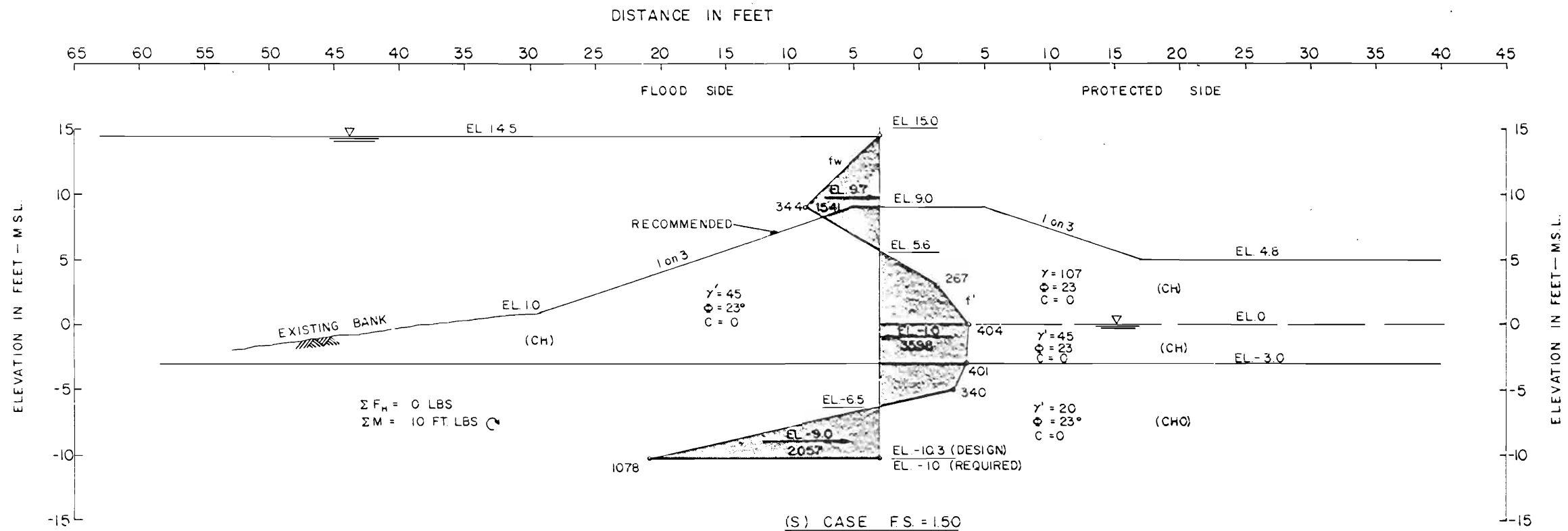

(S) CASE F.S. = 1.50

STA 16+58.38 TO STA 16+89.83
STA 17+99.33 TO STA 23+65.58
STA 24+75.08 TO STA 26+78

GENERAL NOTES

(S)	CONSOLIDATED-DRAINED SHEAR STRENGTH CANTILEVER SHEET PILE STABILITY BY METHOD OF PLANES ANALYSIS
γ	UNIT WEIGHT OF SOIL IN PCF
γ'	SUBMERGED WEIGHT OF SOIL IN PCF
Φ	ANGLE OF INTERNAL FRICTION IN DEGREES
ΣF_h	SUMMATION OF HORIZONTAL FORCES
ΣM	SUMMATION OF MOMENTS ABOUT TIP OF SHEET PILE.
FS	FACTOR OF SAFETY WITH RESPECT TO (S) SHEAR STRENGTH. $\tan \Phi' = \frac{\tan \Phi}{F.S.}$
C	UNIT COHESION IN LBS/FT^2
fw	LATERAL WATER PRESSURE
f'	NET LATERAL PRESSURE OF EARTH AND WATER ON FLOOD AND PROTECTED SIDE
(S)	CASE GOVERNS DESIGN ON BOTH SECTIONS

NOTE
Z-27 Sheet pile exists between El. 11.5 and El.-10.0 for both sections

LAKE PONTCHARTRAIN, LA AND VICINITY
LAKE PONTCHARTRAIN BARRIER PLAN
DESIGN MEMORANDUM NO. 2-GENERAL DESIGN
SUPPLEMENT NO. 8
IHNC REMAINING LEVEES

CANTILEVER SHEET PILE (S) STABILITY

U.S. ARMY ENGINEER DISTRICT, NEW ORLEANS
CORPS OF ENGINEERS
OCTOBER 1971
FILE NO. H-2-25872

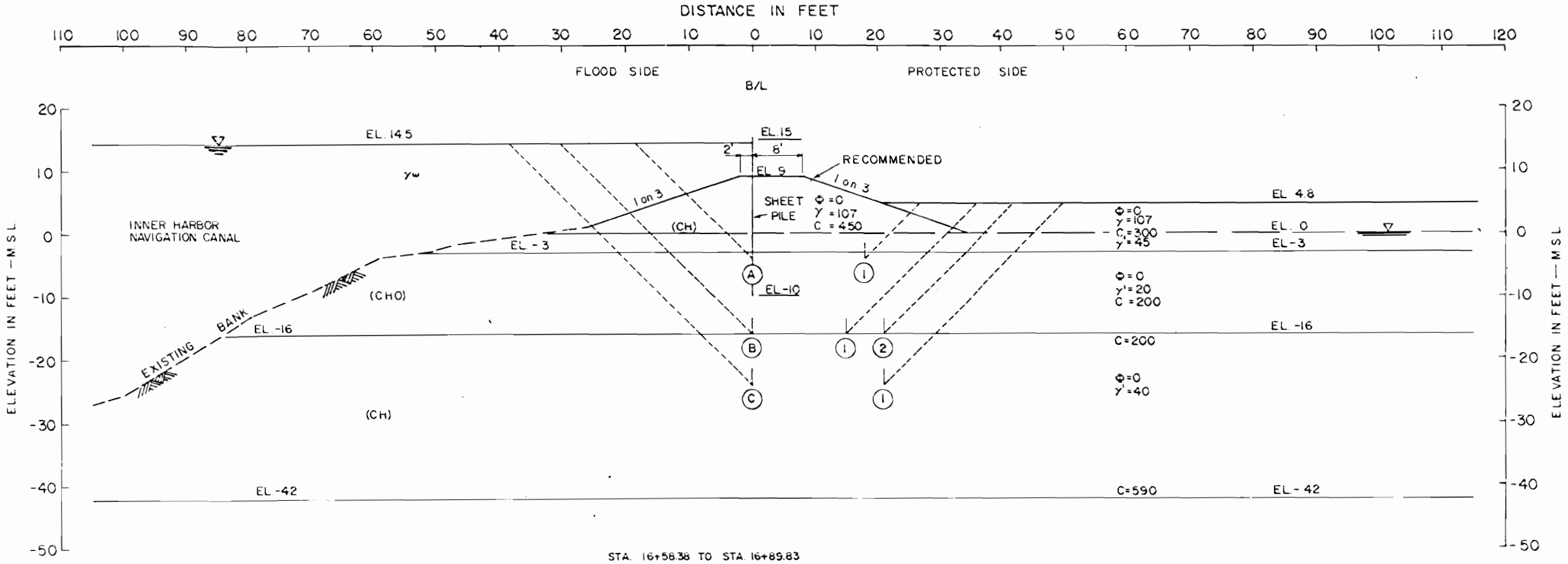

ASSUMED FAILURE SURFACE		RESISTING FORCES			DRIVING FORCES		SUMMATIONS		*FACTOR OF SAFETY
NO.	ELEV.	R_A	R_B	R_P	D_A	$-D_P$	ΣR	ΣD	
A 1	-4.0	7600	3600	6070	13,678	4217	17,270	9461	1.83
B 1	-16.0	9925	3000	10,120	29,972	13,948	23,045	16,024	1.44
B 2	-16.0	9925	4200	9,880	29,972	13,125	24,005	16,847	1.42
C 1	-24.0	12,285	6720	14,040	42,464	21,649	33,045	20,815	1.59

* FACTOR OF SAFETY ≥ 1.0 REQUIRED BETWEEN EL -3.7 AND EL -10.0

FACTOR OF SAFETY ≥ 1.3 REQUIRED BELOW EL -10.0

GENERAL NOTES

Φ ANGLE OF INTERNAL FRICTION, DEGREES
C UNIT COHESION, P.S.F.
D HORIZONTAL DRIVING FORCE, POUNDS
R HORIZONTAL RESISTANCE, POUNDS
A AS A SUBSCRIPT, REFERS TO ACTIVE WEDGE
B AS A SUBSCRIPT, REFERS TO CENTRAL BLOCK
P AS A SUBSCRIPT, REFERS TO PASSIVE WEDGE

$$\text{FACTOR OF SAFETY} = \frac{R_A + R_B + R_P}{D_A - D_P}$$

γ UNIT WEIGHT OF SOIL, P.C.F.
γ' SUBMERGED UNIT WEIGHT OF SOIL, P.C.F.
Σ STATIC WATER SURFACE
γw UNIT WEIGHT OF WATER, P.C.F.

NOTE:
Z-27 Sheet pile exists between El 11.5 and El -10.0

LAKE PONTCHARTRAIN, LA. AND VICINITY
LAKE PONTCHARTRAIN BARRIER PLAN
DESIGN MEMORANDUM NO. 2-GENERAL DESIGN
SUPPLEMENT NO. 8

IHNC REMAINING LEVEES
(Q) STABILITY ANALYSIS
I-WALL
PROTECTED SIDE

U.S. ARMY ENGINEER DISTRICT, NEW ORLEANS
CORPS OF ENGINEERS

OCTOBER 1971 FILE NO. H-2-25872

PLATE 5

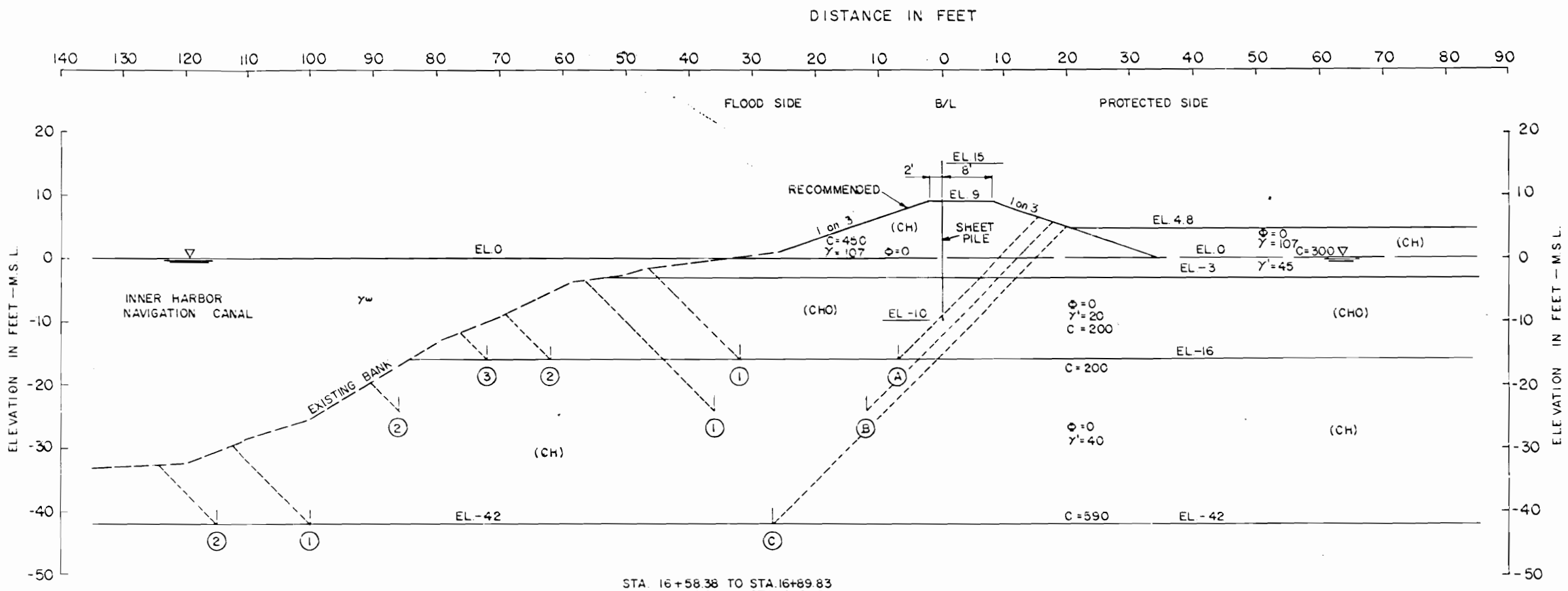

ASSUMED FAILURE SURFACE		RESISTING FORCES			DRIVING FORCES		SUMMATIONS		FACTOR OF SAFETY
NO.	ELEV	R_A	R_B	R_P	D_A	$-D_P$	ΣR	ΣD	
A 1	-16.0	12,850	5000	6100	21,609	3209	23,950	18,400	1.30
A 2	-16.0	12,850	11,000	2860	21,609	752	26,710	20,857	1.28
A 3	-16.0	12,850	13,000	1640	21,609	242	27,490	21,367	1.29
B 1	-24.0	16,335	7680	9160	31,493	6212	33,175	25,281	1.31
B 2	-24.0	16,335	23,680	2495	31,493	588	42,509	30,905	1.38
C 1	-42.0	32,040	42,262	12,406	57,664	4125	86,708	53,539	1.62
C 2	-42.0	32,040	47,714	9856	57,664	1990	89,610	55,674	1.61

GENERAL NOTES

- Φ ANGLE OF INTERNAL FRICTION, DEGREES
- C UNIT COHESION, P.S.F.
- D HORIZONTAL DRIVING FORCE, POUNDS
- R HORIZONTAL RESISTANCE, POUNDS
- A AS A SUBSCRIPT, REFERS TO ACTIVE WEDGE
- B AS A SUBSCRIPT, REFERS TO CENTRAL BLOCK
- P AS A SUBSCRIPT, REFERS TO PASSIVE WEDGE

FACTOR OF SAFETY = $\frac{R_A + R_B + R_P}{D_A - D_P}$

- γ UNIT WEIGHT OF SOIL, P.C.F.
- γ' SUBMERGED UNIT WEIGHT SOIL, P.C.F.
- ∇ STATIC WATER SURFACE
- γw UNIT WEIGHT OF WATER, P.C.F.

NOTE
Z-27 Sheet pile exists between El. 11.5 and El. -10.0.

LAKE PONTCHARTRAIN, LA. AND VICINITY
LAKE PONTCHARTRAIN BARRIER PLAN
DESIGN MEMORANDUM NO. 2-GENERAL DESIGN
SUPPLEMENT NO. 8
IHNC REMAINING LEVEES

(Q) STABILITY ANALYSIS I-WALL FLOOD SIDE

U.S. ARMY ENGINEER DISTRICT, NEW ORLEANS
CORPS OF ENGINEERS
OCTOBER 1971
FILE NO. H-2-25872

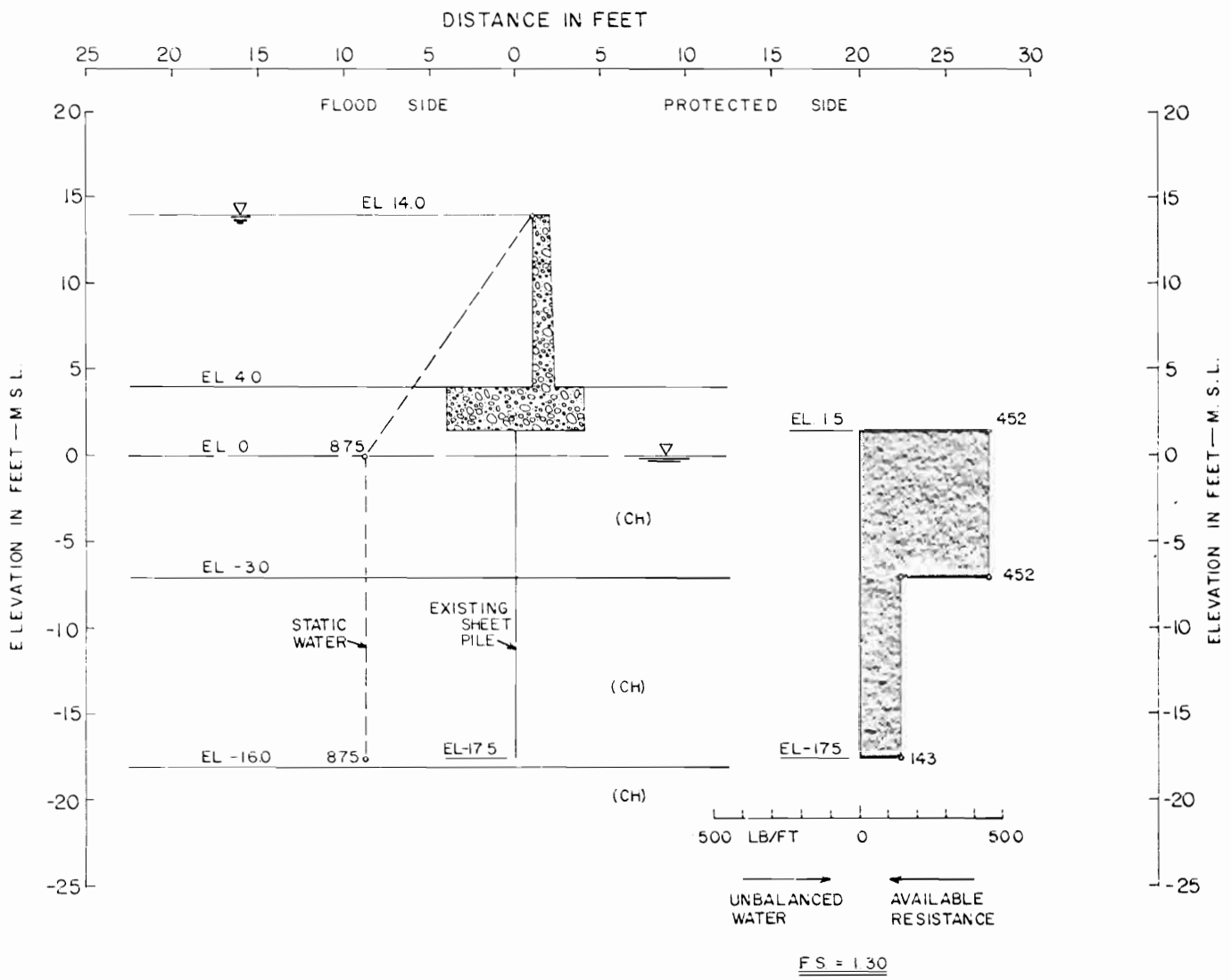

SHEET PILE CUTOFF DESIGN

STA 206+86.70 TO STA 207+24.70+0+00
STA 0+00 TO STA 0+40.75

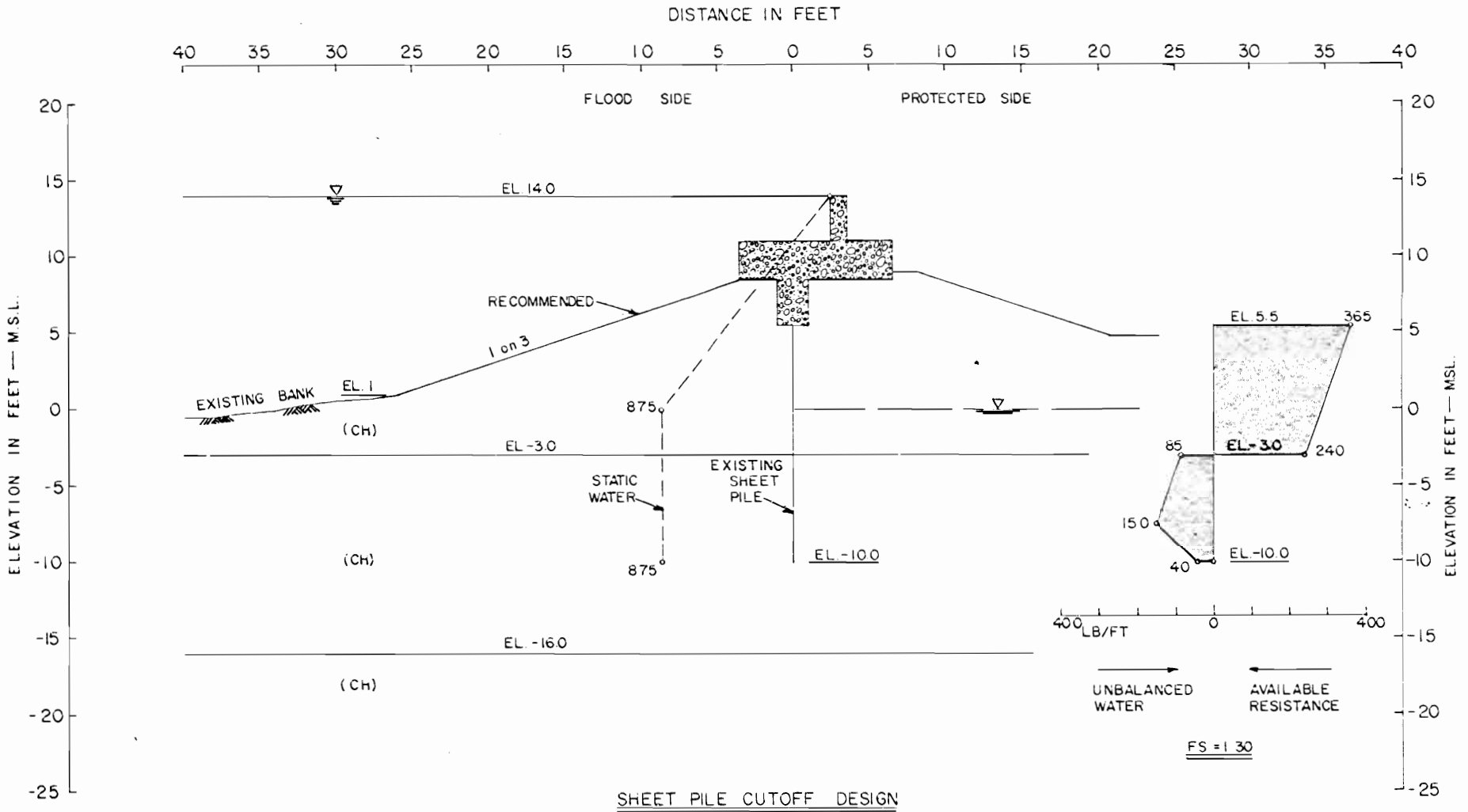

SHEET PILE CUTOFF DESIGN

STA 16+89.83 TO STA 17+99.33
STA 23+65.58 TO STA 24+75.08

NOTES:

RESISTANCES DUE TO BEARING PILES SUPPORTING T-WALL AND GATES WAS NEGLECTED.

AVAILABLE RESISTANCE SHOWN IS THAT IN EXCESS OF THE RESISTANCE DEVELOPED TO BALANCE THE WATER LOAD

LAKE PONTCHARTRAIN, LA AND VICINITY
LAKE PONTCHARTRAIN BARRIER PLAN
DESIGN MEMORANDUM NO 2-GENERAL DESIGN
SUPPLEMENT NO. 8
IHNC REMAINING LEVEES

UNBALANCED WATER LOAD ANALYSIS

U.S. ARMY ENGINEER DISTRICT, NEW ORLEANS
CORPS OF ENGINEERS
OCTOBER 1971
FILE NO. H-2-25872

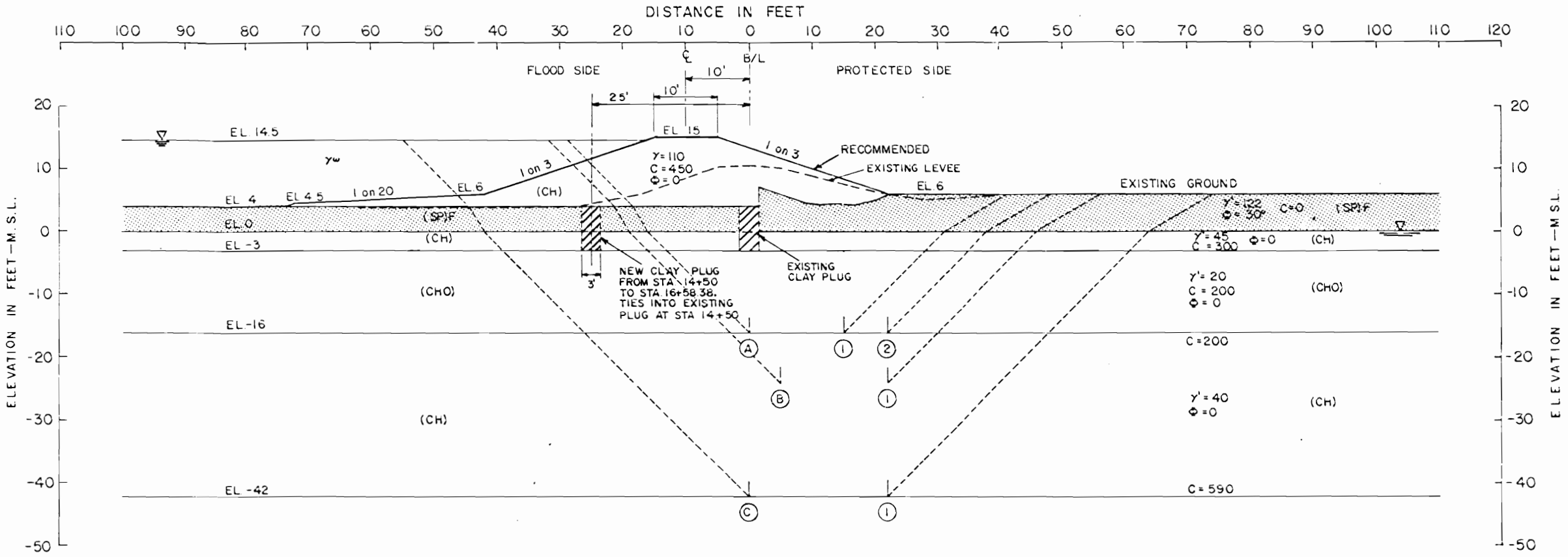

STA 1+07 TO STA 16+58.38

ASSUMED FAILURE SURFACE		RESISTING FORCES			DRIVING FORCES		SUMMATIONS		FACTOR OF SAFETY
NO	ELEV	R_A	R_B	R_P	D_A	$-D_P$	Σ_R	Σ_D	
A 1	-16.0	16,642	3000	11,389	40,543	18,663	31,031	21,880	1.42
A 2	-16.0	16,642	4400	11,389	40,543	17,553	32,431	22,990	1.41
B 1	-24.0	18,744	5440	15,550	56,740	27,848	39,743	28,892	1.38
C 1	-42.0	29,723	12,980	31,930	98,577	60,373	74,633	38,204	1.95

GENERAL NOTES

- Φ ANGLE OF INTERNAL FRICTION, DEGREES
- C UNIT COHESION IN P.S.F
- D HORIZONTAL DRIVING FORCE, POUNDS
- R HORIZONTAL RESISTANCE, POUNDS
- A AS A SUBSCRIPT, REFERS TO ACTIVE WEDGE
- B AS A SUBSCRIPT, REFERS TO CENTRAL BLOCK
- P AS A SUBSCRIPT, REFERS TO PASSIVE WEDGE

$$\text{FACTOR OF SAFETY} = \frac{R_A + R_B + R_P}{D_A - D_P} = \text{F.O.S.}$$

- γ UNIT WEIGHT OF SOIL, P.C.F
- γ' SUBMERGED UNIT WEIGHT OF SOIL, P.C.F
- ∇ STATIC WATER SURFACE
- γw UNIT WEIGHT OF WATER, P.C.F

NOTE:
The flood side analysis was presented on plate III-27 of the GDM, Supplement No. 8.

LAKE PONTCHARTRAIN, LA. AND VICINITY
LAKE PONTCHARTRAIN BARRIER PLAN
DESIGN MEMORANDUM NO. 2-GENERAL DESIGN
SUPPLEMENT NO. 8
IHNC REMAINING LEVEES

(Q) STABILITY ANALYSIS WEST LEVEE PROTECTED SIDE

U.S. ARMY ENGINEER DISTRICT, NEW ORLEANS
CORPS OF ENGINEERS
OCTOBER 1971 FILE NO. H-2-25872

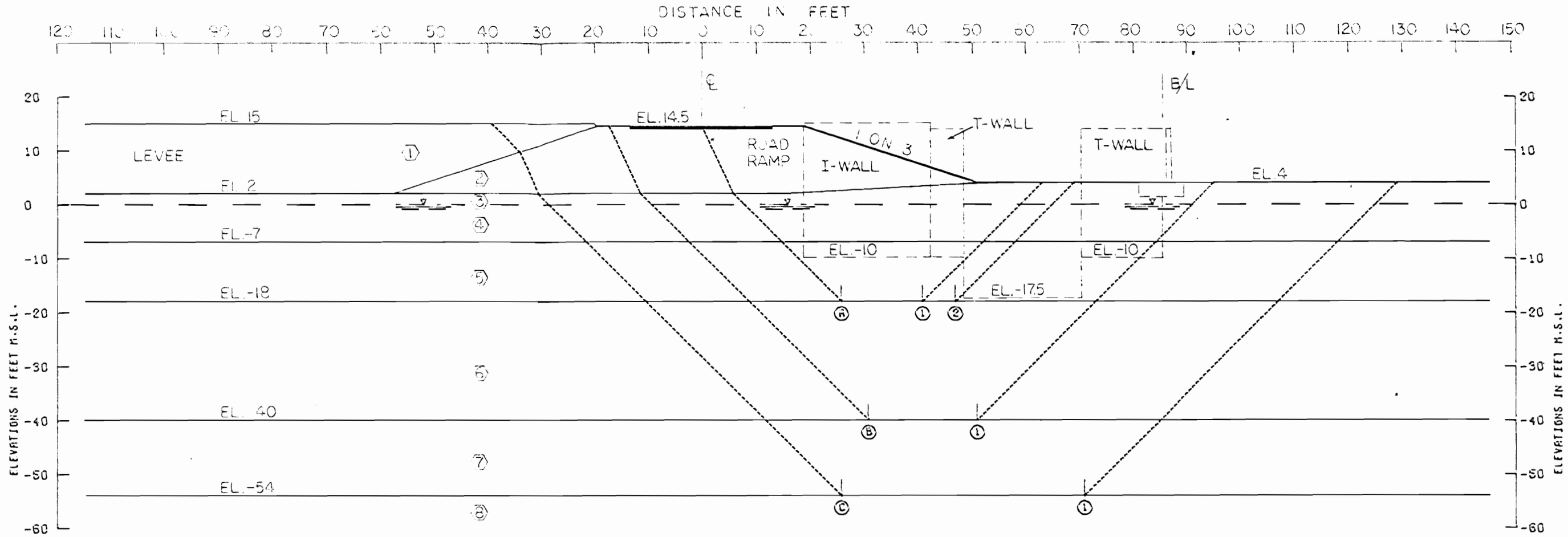

GENERAL NOTES

CLASSIFICATION, STRATIFICATION, SHEAR STRENGTHS, AND UNIT WEIGHTS OF THE SOIL WERE BASED ON THE RESULTS OF THE UNDISTURBED BORINGS. SEE BORING DATA PLATES.

SHEAR STRENGTHS BETWEEN VERTICALS 1 AND 2 WERE ASSUMED TO VARY LINEARLY BETWEEN THE VALUES INDICATED FOR THESE LOCATIONS.

(7) STRATUM NUMBER

(6) WEDGE NUMBER

STRATUM NO.	SOIL TYPE	EFFECTIVE UNIT WT. P.C.F.		C - UNIT COHESION - P.S.F.				FRICTION ANGLE DEGREES
				CENTER OF STRATUM		BOTTOM OF STRATUM		
		VERT. 1	VERT. 2	VERT. 1	VERT. 2	VERT. 1	VERT. 2	
(1)	CH	107.0	107.0	450.0	450.0	450.0	450.0	0.0
(2)	SI	92.0	92.0	0.0	0.0	0.0	0.0	40.0
(3)	CH	107.0	107.0	350.0	350.0	350.0	350.0	0.0
(4)	CH	45.0	45.0	350.0	350.0	350.0	350.0	0.0
(5)	CH	20.0	20.0	250.0	250.0	250.0	250.0	0.0
(6)	CH	40.0	40.0	350.0	350.0	350.0	350.0	0.0
7	CH	40.0	40.0	450.0	450.0	450.0	450.0	0.0
(8)	SP	60.0	60.0	0.0	0.0	0.0	0.0	33.0

SOIL STRATIFICATION AND STRENGTHS WERE TAKEN FROM PLATE III-28 OF THE G.D.M., SUPPLEMENT No. 8.

ASSUMED FAILURE NO.		SURFACE ELEV.	RESISTING FORCES R_A	R_B	R_P	DRIVING FORCES D_A	$-D_P$	SUMMATION OF FORCES RESISTING	DRIVING	FACTOR OF SAFETY
(A)	(1)	-18.00	17434	3750	13200	39356	15800	34384	23556	1.460
(A)	(2)	-18.00	17434	5250	13200	39356	14568	35884	24788	1.448
(B)	(1)	-40.00	32834	7000	28600	85440	45156	68434	44244	1.547
(C)	(1)	-54.00	50073	20250	41200	135846	74516	111523	60930	1.830

NOTES

ϕ -- ANGLE OF INTERNAL FRICTION, DEGREES
C -- UNIT COHESION, P.S.F.
∇ -- STATIC WATER SURFACE
D -- HORIZONTAL DRIVING FORCE IN POUNDS
R -- HORIZONTAL RESISTING FORCE IN POUNDS
A -- AS A SUBSCRIPT, REFERS TO ACTIVE WEDGE
B -- AS A SUBSCRIPT, REFERS TO CENTRAL BLOCK
P -- AS A SUBSCRIPT, REFERS TO PASSIVE WEDGE

FACTOR OF SAFETY = $\frac{R_A + R_B + R_P}{D_A - D_P}$

LAKE PONTCHARTRAIN, LA AND VICINITY
LAKE PONTCHARTRAIN BARRIER PLAN
DESIGN MEMORANDUM NO. 2 - GENERAL DESIGN
SUPPLEMENT NO. 8
IHNC REMAINING LEVEES
(Q) STABILITY ANALYSIS
FRANCE ROAD RAMP
US ARMY ENGINEER DISTRICT, NEW ORLEANS
CORPS OF ENGINEERS
OCOTOBER 1971 FILE NO. H-2-25872

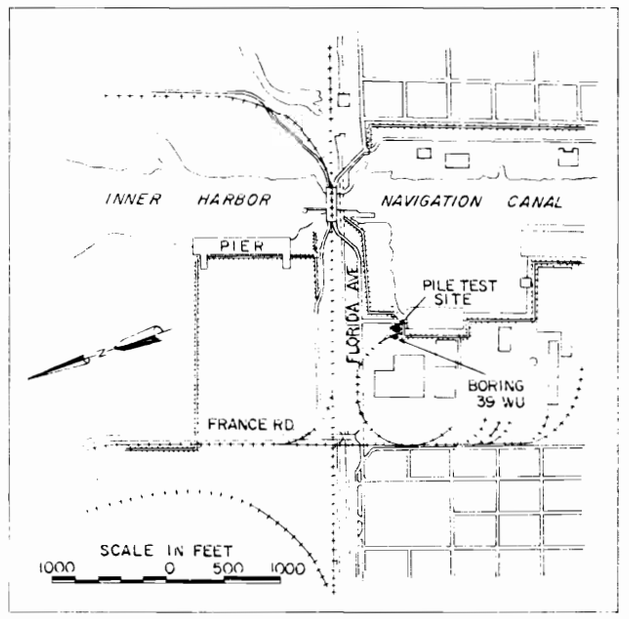

PILE TEST LOCATION

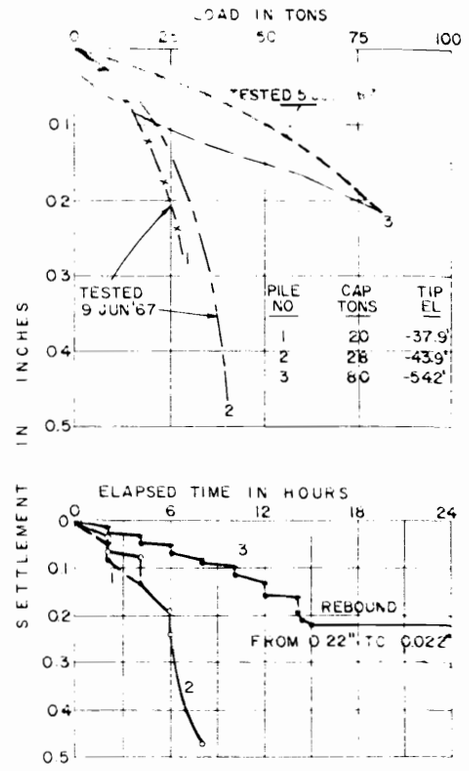

COMPRESSION TESTS

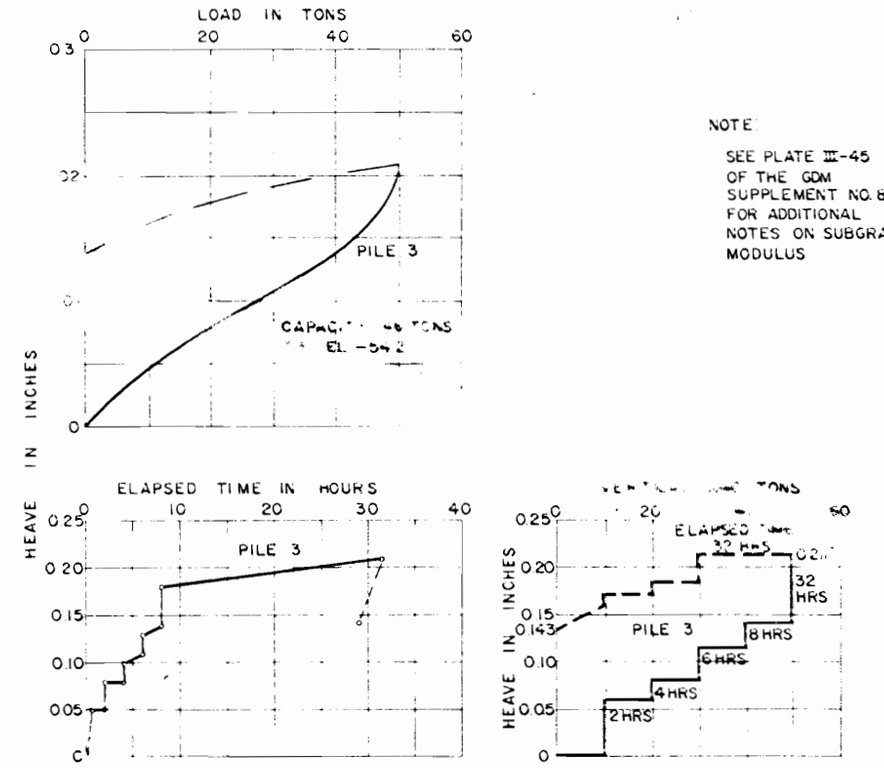

TENSION TEST

NOTE

SEE PLATE III-45 OF THE GDM SUPPLEMENT NO. 8 FOR ADDITIONAL NOTES ON SUBGRADE MODULUS

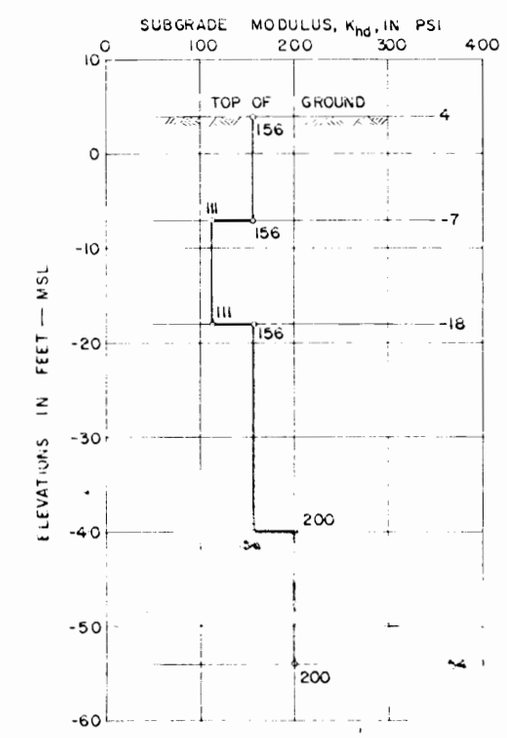

STA 206+86.7 TO STA 207+24.7=0+00
STA 0+00 TO STA 0+40.78

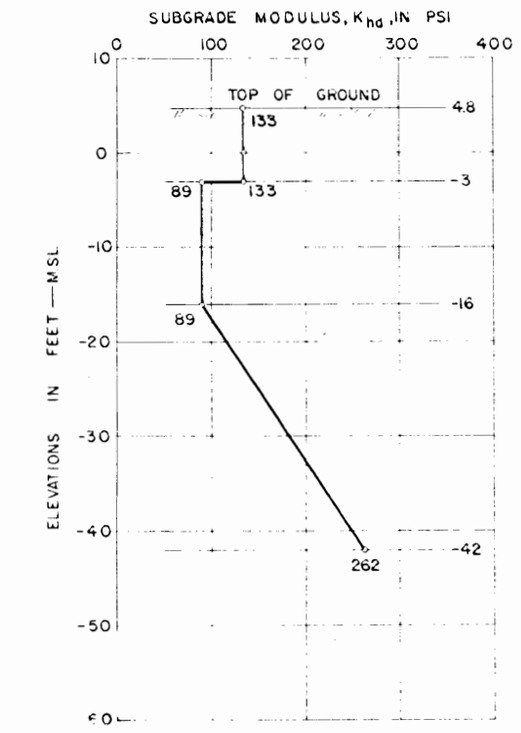

STA 16+85.83 TO STA 17+99.33
STA 23+65.58 TO STA 24+75.08

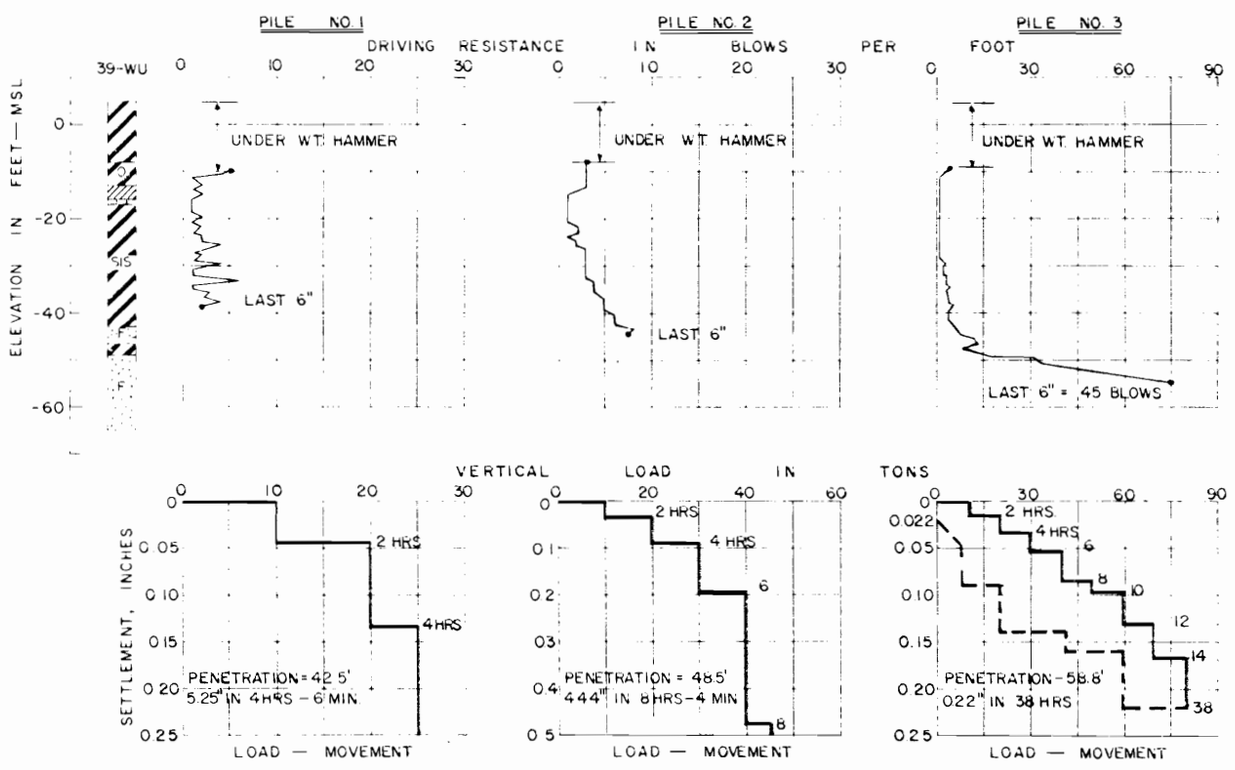

PILE DRIVING AND LOADING DATA

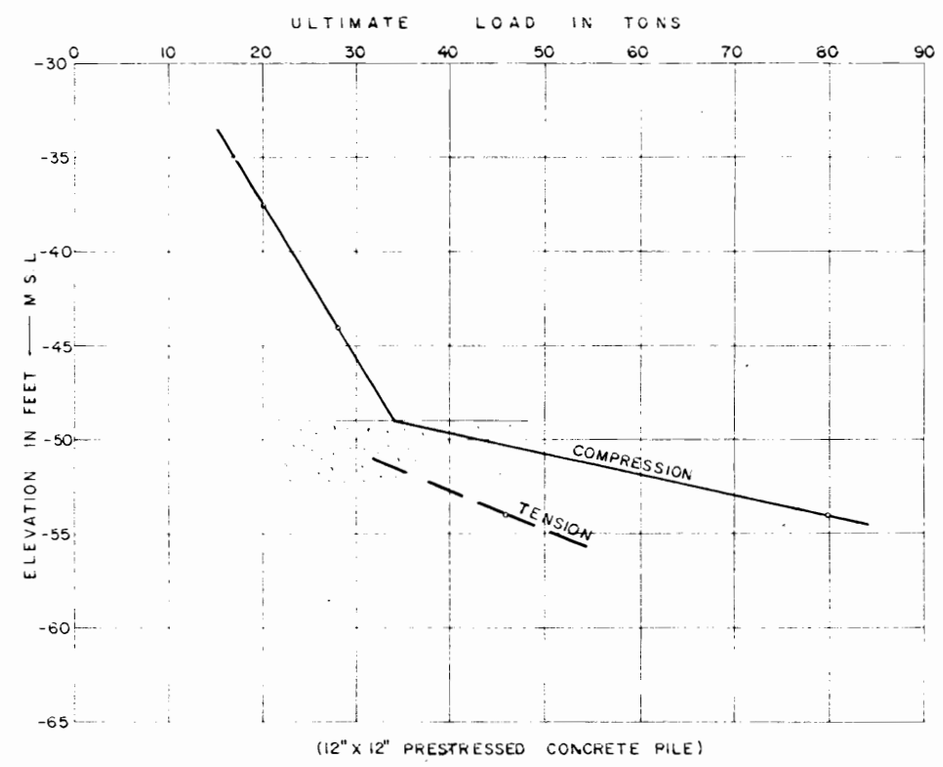

ULTIMATE LOAD VS TIP ELEVATION

GENERAL NOTES

THE PILE TEST DATA SHOWN HERE ARE TAKEN FROM THE TEST MADE FOR THE "I.H.N.C. WEST LEVEE FLORIDA AVENUE TO THE I.H.N.C. LOCK" PROJECT, SITE NO1 WHICH IS ADJACENT TO THE "WEST LEVEE RELOCATION" PROJECT (SEE THE PILE TEST LOCATION MAP ON THIS PLATE).

PILING WAS DRIVEN USING A VULCAN 05 HAMMER WITH MOVING HEAD WEIGHING 6,500 POUNDS AND OPERATING STEAM PRESSURE OF 115-120 PSI

ALL PILES DRIVEN WERE 12"X12" PRESTRESSED CONCRETE

DESIGN LOADS SHALL BE MULTIPLIED BY THE RESPECTIVE FACTOR OF SAFETY, 1.75 FOR COMPRESSION AND 2.00 FOR TENSION BEFORE DETERMINING TIP ELEVATION FROM THE GRAPH

LAKE PONTCHARTRAIN, LA AND VICINITY
LAKE PONTCHARTRAIN BARRIER PLAN
DESIGN MEMORANDUM NO 2-GENERAL DESIGN
SUPPLEMENT NO 8

IHNC REMAINING LEVEES

PILE CAPACITIES AND SUBGRADE MODULI WEST LEVEE

U.S. ARMY ENGINEER DISTRICT, NEW ORLEANS
CORPS OF ENGINEERS

OCOTOBER 1971 FILE NO. H-2-25872

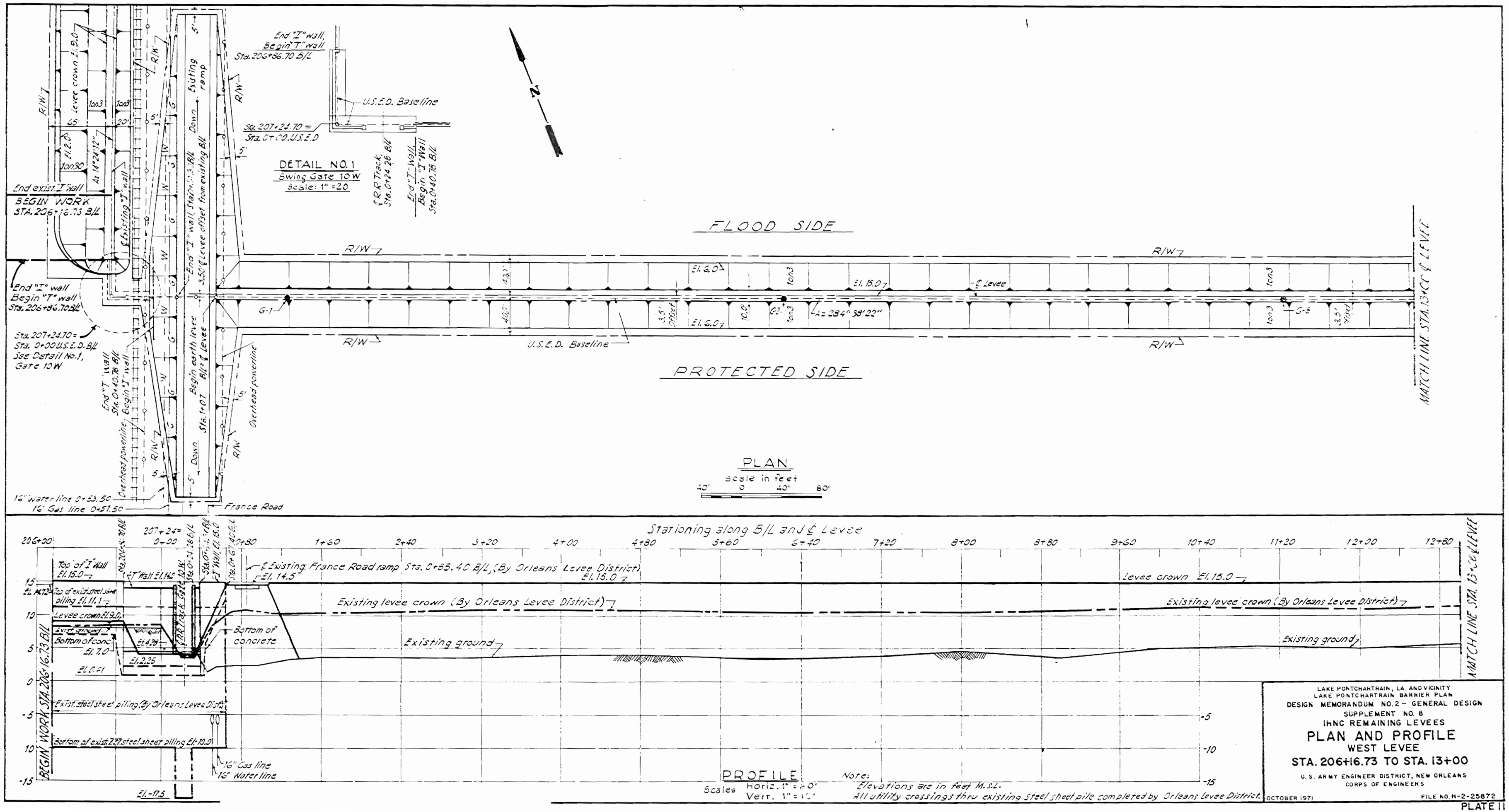

LAKE PONTCHARTRAIN, LA. AND VICINITY
LAKE PONTCHARTRAIN BARRIER PLAN
DESIGN MEMORANDUM NO. 2 – GENERAL DESIGN
SUPPLEMENT NO. 8
IHNC REMAINING LEVEES

PLAN AND PROFILE
WEST LEVEE
STA. 206+16.73 TO STA. 13+00

U. S. ARMY ENGINEER DISTRICT, NEW ORLEANS
CORPS OF ENGINEERS

OCTOBER 1971 FILE NO. H-2-25872

PLATE 11

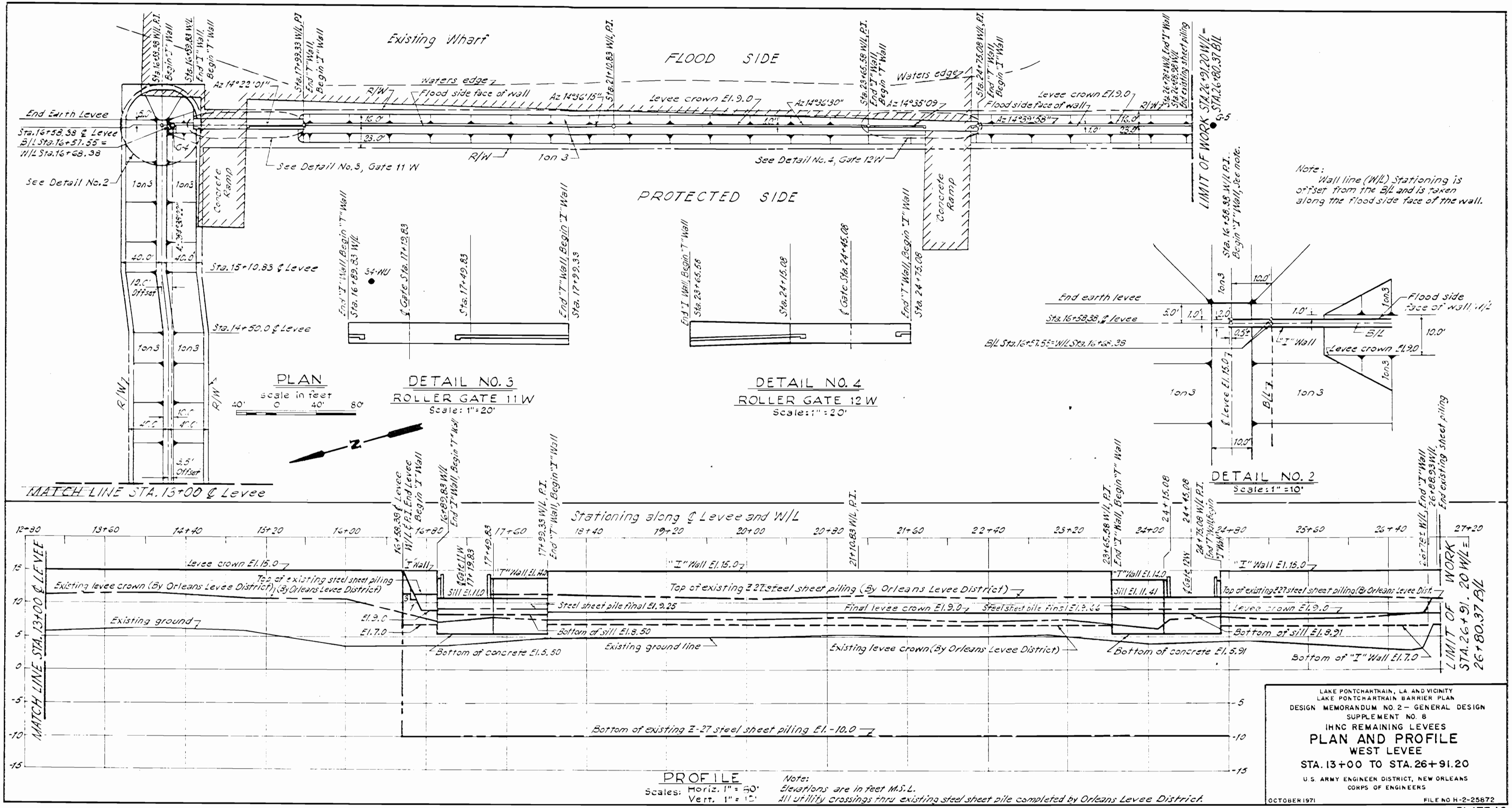
Existing Wharf
FLOOD SIDE
PROTECTED SIDE
Waters edge
Flood side face of wall
Levee crown El. 9.0
End Earth Levee
Sta. 16+58.38 ℄ Levee
B/L Sta. 16+57.55 = W/L Sta. 16+68.38
See Detail No. 2
See Detail No. 3, Gate 11 W
See Detail No. 4, Gate 12 W
Sta. 15+10.83 ℄ Levee
Sta. 14+50.0 ℄ Levee
Concrete Ramp
R/W
1 on 3
LIMIT OF WORK STA. 26+91.20 W/L = STA. 26+80.37 B/L
Note: Wall line (W/L) Stationing is offset from the B/L and is taken along the flood side face of the wall.
PLAN
scale in feet
DETAIL NO. 3
ROLLER GATE 11 W
Scale: 1" = 20'
DETAIL NO. 4
ROLLER GATE 12 W
Scale: 1" = 20'
DETAIL NO. 2
Scale: 1" = 10'
End earth levee
Flood side face of wall
"I" Wall
B/L
MATCH LINE STA. 13+00 ℄ Levee
Stationing along ℄ Levee and W/L
Levee crown El. 15.0
Existing levee crown (By Orleans Levee District)
Top of existing steel sheet piling (By Orleans Levee District)
Existing ground
Top of existing Z 27 steel sheet piling (By Orleans Levee District)
Steel sheet pile final El. 9.25
Final levee crown El. 9.0
Bottom of sill El. 8.50
Existing ground line
Bottom of concrete El. 5.50
Bottom of concrete El. 5.91
Bottom of "I" Wall El. 7.0
Bottom of existing Z-27 steel sheet piling El. -10.0
LIMIT OF WORK STA. 26+91.20 W/L = STA. 26+80.37 B/L
PROFILE
Scales: Horiz. 1" = 50' Vert. 1" = 10'
Note: Elevations are in feet M.S.L. All utility crossings thru existing steel sheet pile completed by Orleans Levee District.
LAKE PONTCHARTRAIN, LA. AND VICINITY
LAKE PONTCHARTRAIN BARRIER PLAN
DESIGN MEMORANDUM NO. 2 – GENERAL DESIGN
SUPPLEMENT NO. 8
IHNC REMAINING LEVEES
PLAN AND PROFILE
WEST LEVEE
STA. 13+00 TO STA. 26+91.20
U.S. ARMY ENGINEER DISTRICT, NEW ORLEANS
CORPS OF ENGINEERS
OCTOBER 1971
FILE NO. H-2-25872

PLATE 12

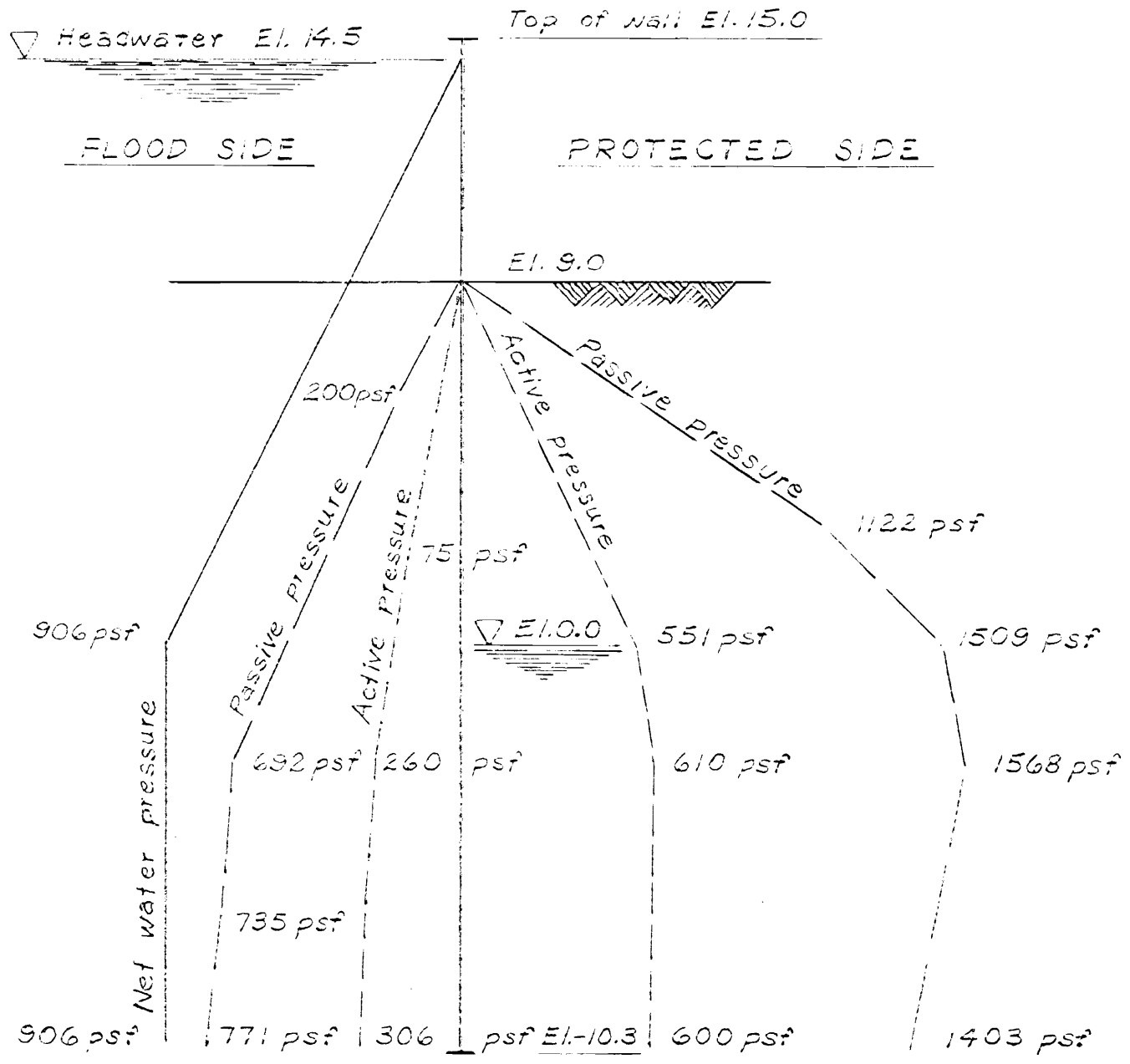

PRESSURE DIAGRAM (F.S. = 1.5)

Scales: 1" = 4'
1" = 500 psf

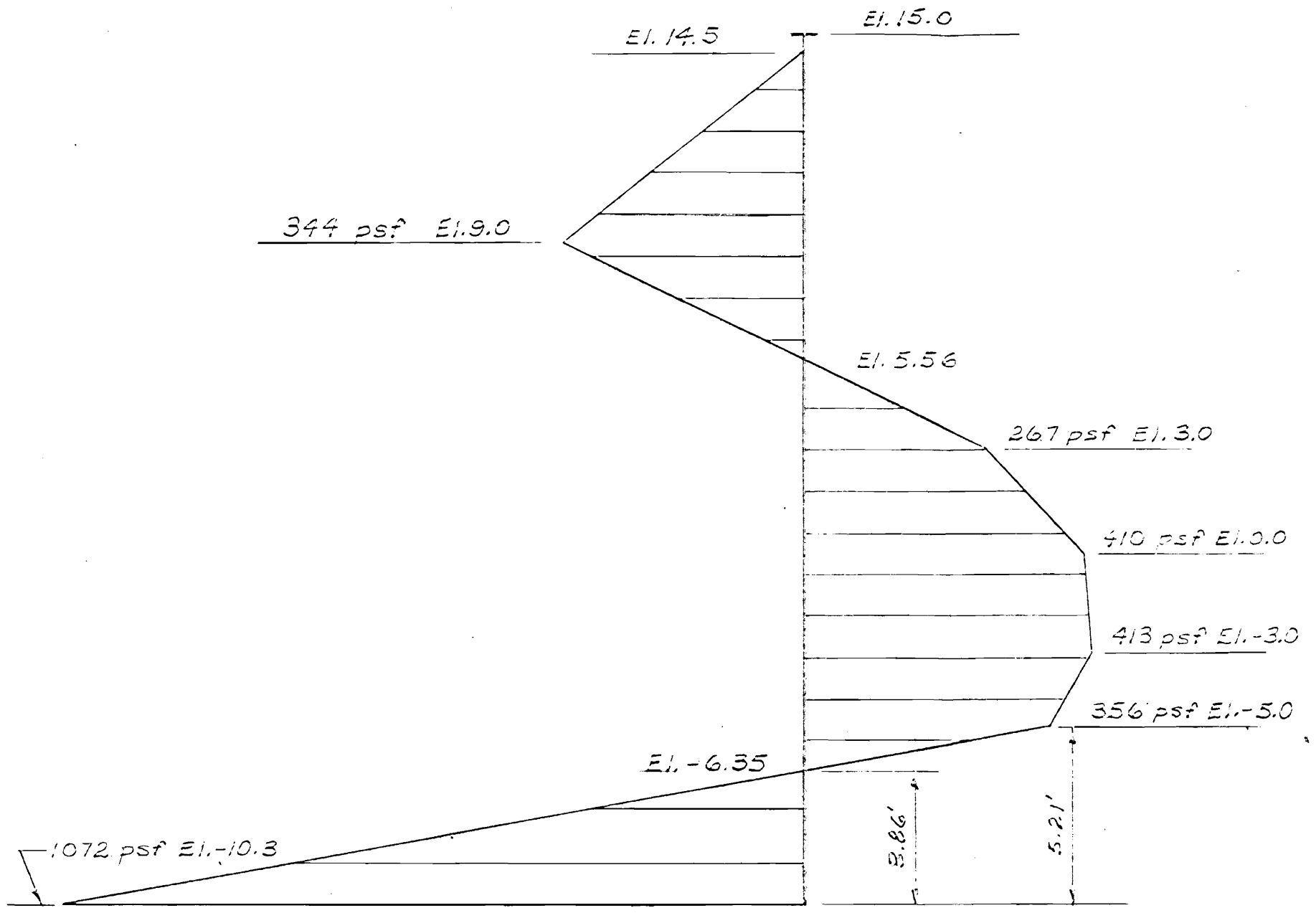

NET PRESSURE DIAGRAM (F.S. = 1.5)

Scales: 1" = 4'
1" = 200 psf

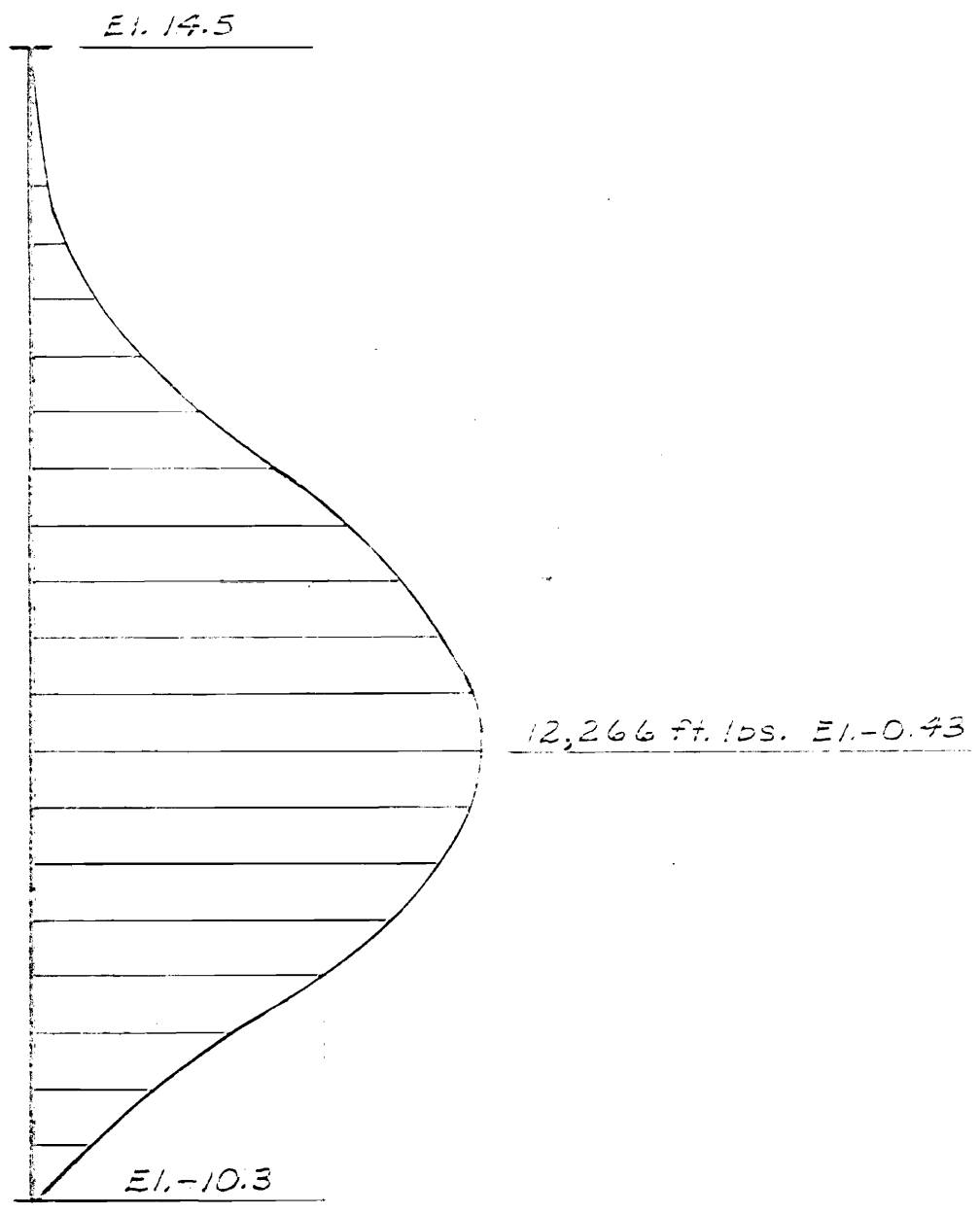

MOMENT DIAGRAM (F.S. = 1.5)

MAX. DEFLECTION = 0.68"

Scales: 1" = 4'
1" = 5000 ft. lbs.

STA. 16+58.38 TO STA. 26+78 I

(Gates Excepted)

LAKE PONTCHARTRAIN, LA. AND VICINITY
LAKE PONTCHARTRAIN BARRIER PLAN
DESIGN MEMORANDUM NO.2-GENERAL DESIGN
SUPPLEMENT NO.8
IHNC REMAINING LEVEES

I-WALL DESIGN ANALYSIS

WEST LEVEE

U. S. ARMY ENGINEER DISTRICT, NEW ORLEANS
CORPS OF ENGINEERS

OCTOBER 1971 FILE NO. H-2-25872

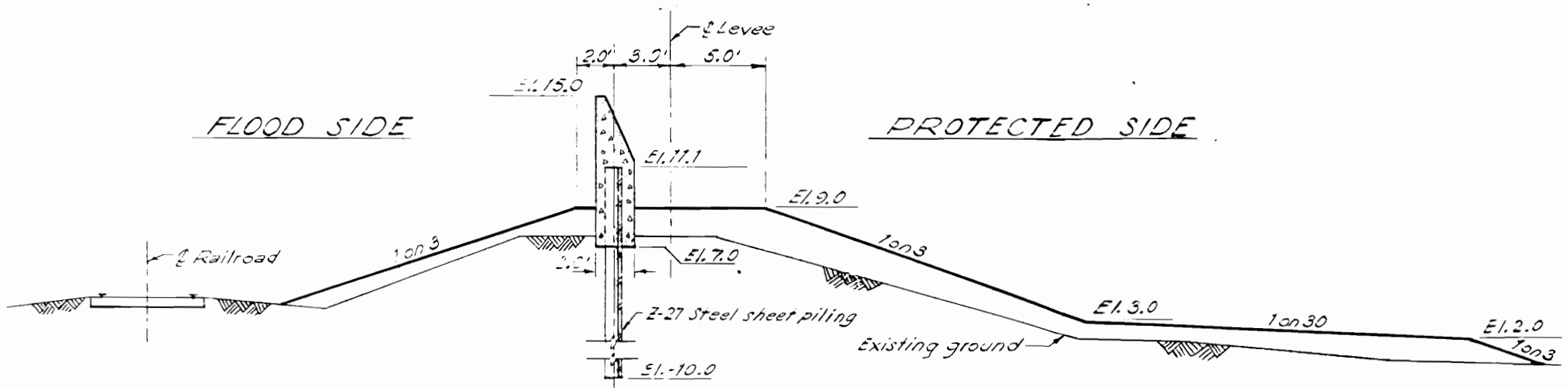

STA. 206+16.73 B/L To STA. 206+86.70 B/L

Scale: 1" = 8'

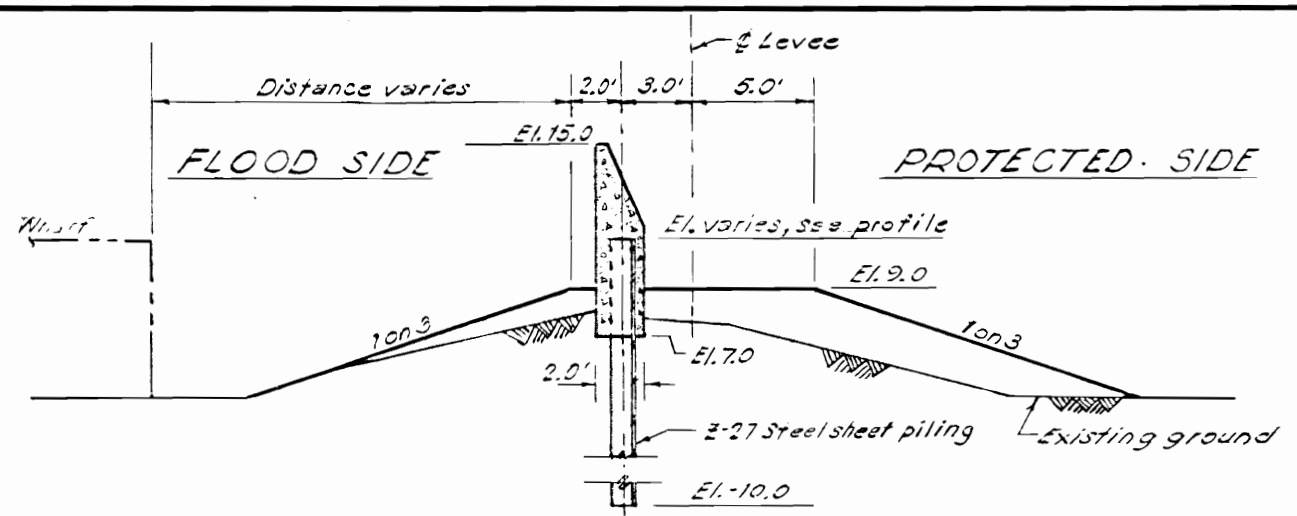

STA. 16+58.38 W/L To STA. 16+89.83 W/L

STA. 17+99.33 W/L To STA. 23+65.58 W/L

STA. 24+75.08 W/L To STA. 26+78 ± W/L

Scale: 1" = 8'

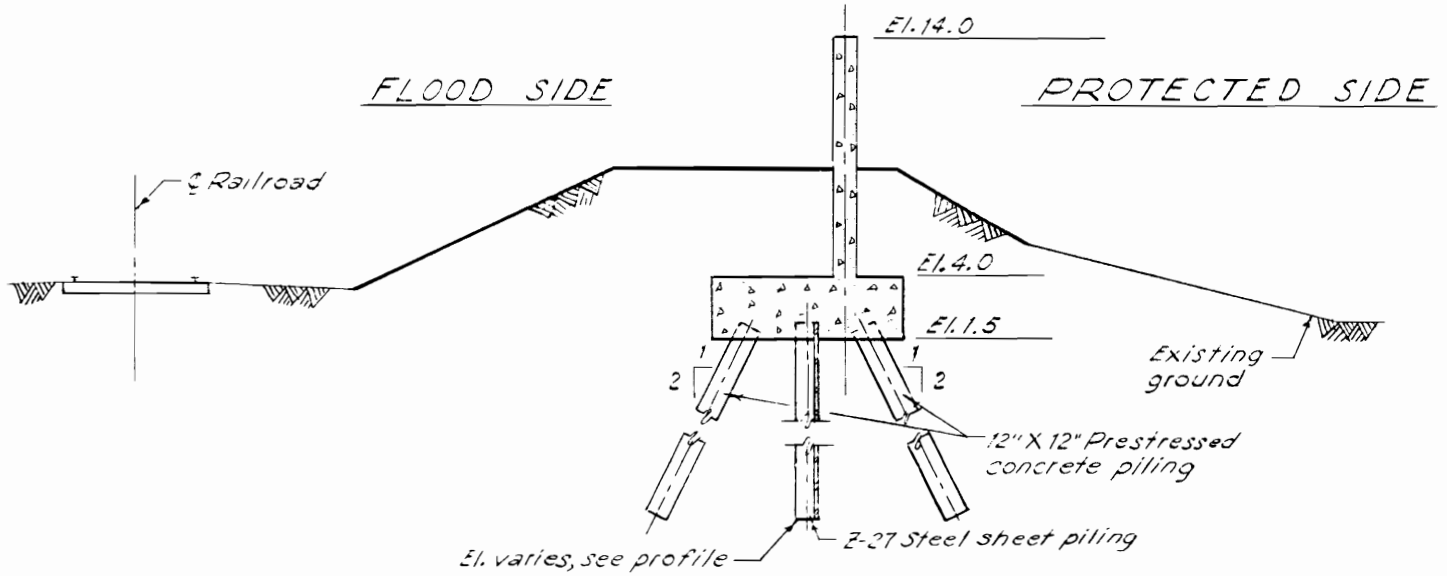

STA. 206+86.70 B/L To STA. 207+24.70 = 0+00 B/L

STA. 0+00 B/L To STA. 0+40.78 B/L

Scale: 1" = 8'

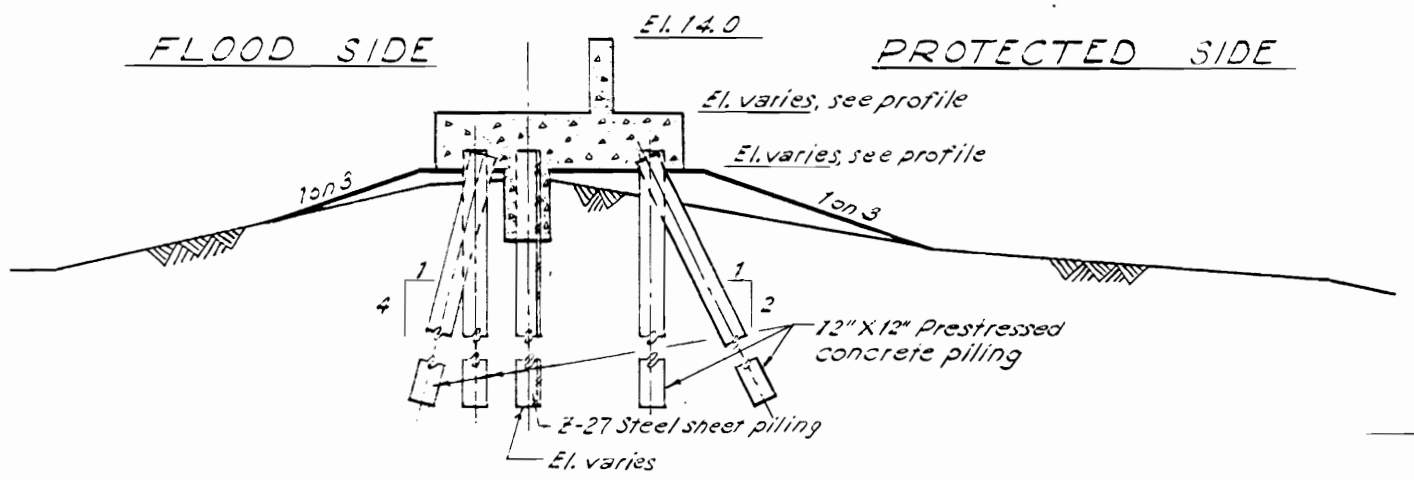

STA. 16+89.83 W/L To STA. 17+99.33 W/L

STA. 23+65.58 W/L To STA. 24+75.08 W/L

Scale: 1" = 8'

Notes:

1. A profile at ℄ of the France Road ramp in the vicinity of Florida Ave. (Sta. 0+64.30 B/L to Sta. 1+07.0 B/L is shown on PLATE IV-42 G.D.M. No. 2, supplement No. 8 submitted 28 Feb. 1968.

2. All prestressed concrete pile tip elevations -54.0.

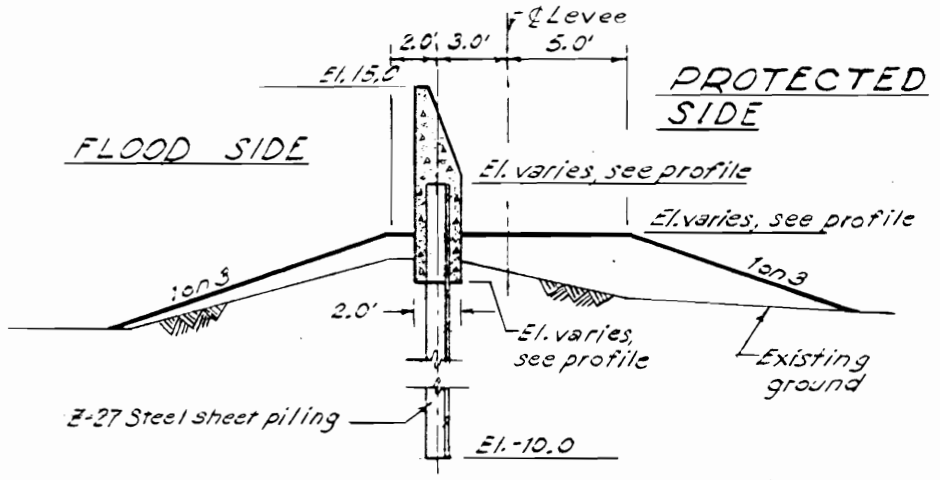

STA. 0+40.78 B/L STA. 0+64.30 B/L

Scale: 1" = 8'

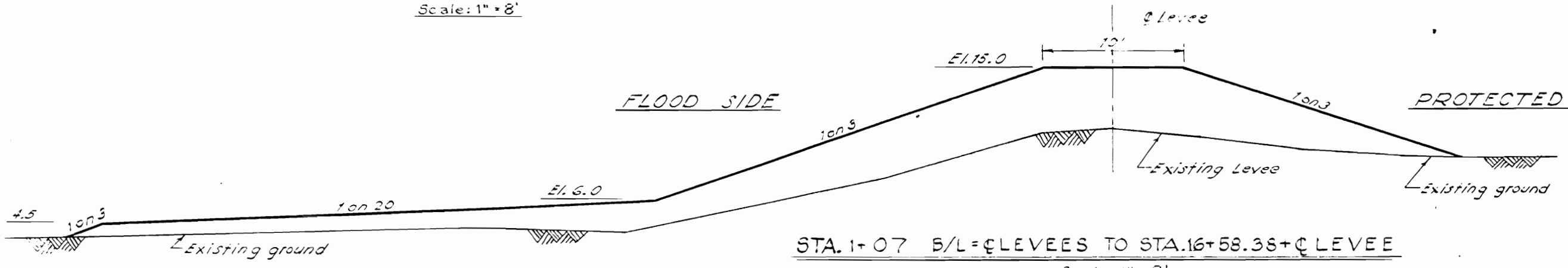

STA. 1+07 B/L = ℄ LEVEES TO STA. 16+58.38 + ℄ LEVEE

Scale: 1" = 8'

LAKE PONTCHARTRAIN, LA. AND VICINITY
LAKE PONTCHARTRAIN BARRIER PLAN
DESIGN MEMORANDUM NO. 2 – GENERAL DESIGN
SUPPLEMENT NO. 8
IHNC REMAINING LEVEES

TYPICAL DESIGN SECTIONS

WEST LEVEE

U.S. ARMY ENGINEER DISTRICT, NEW ORLEANS
CORPS OF ENGINEERS

OCTOBER 1971

FILE NO. H-2-25872

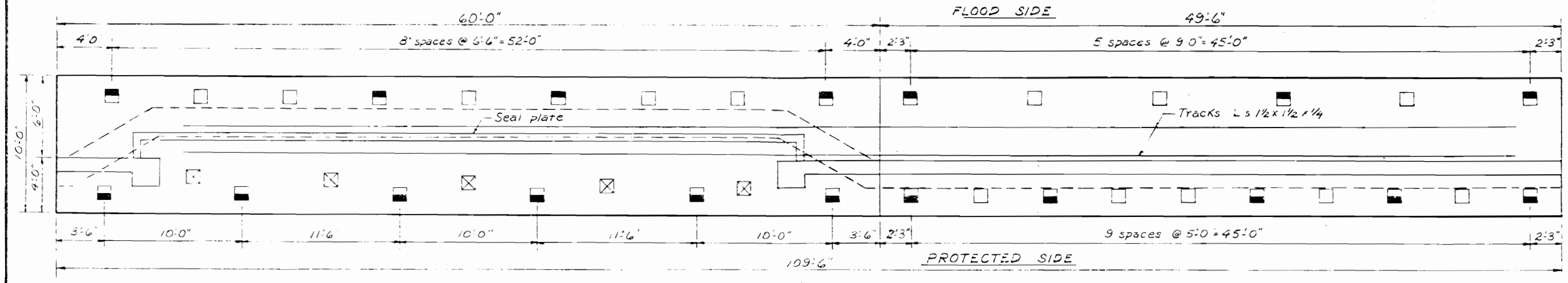

PLAN OF GATE MONOLITH

Scale: ½" = 1'-0"

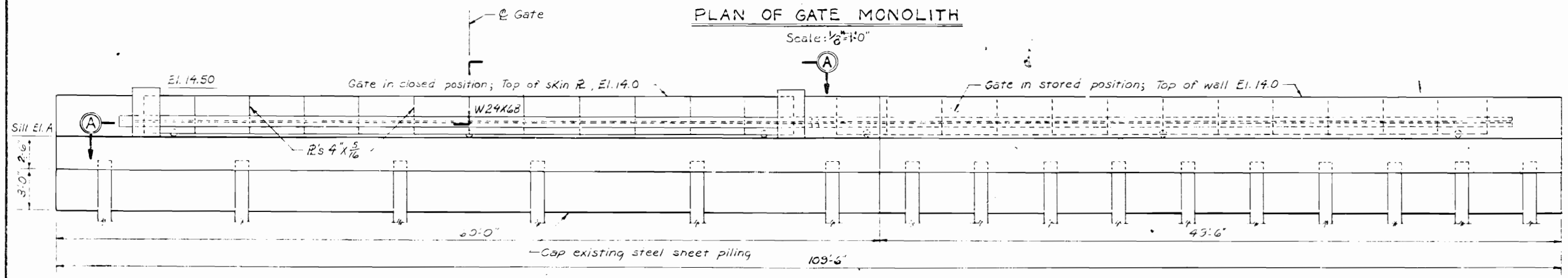

TYPICAL PROTECTED SIDE ELEVATION OF GATE

(GATE 11W SHOWN)

Scale: ⅛" = 1'-0"

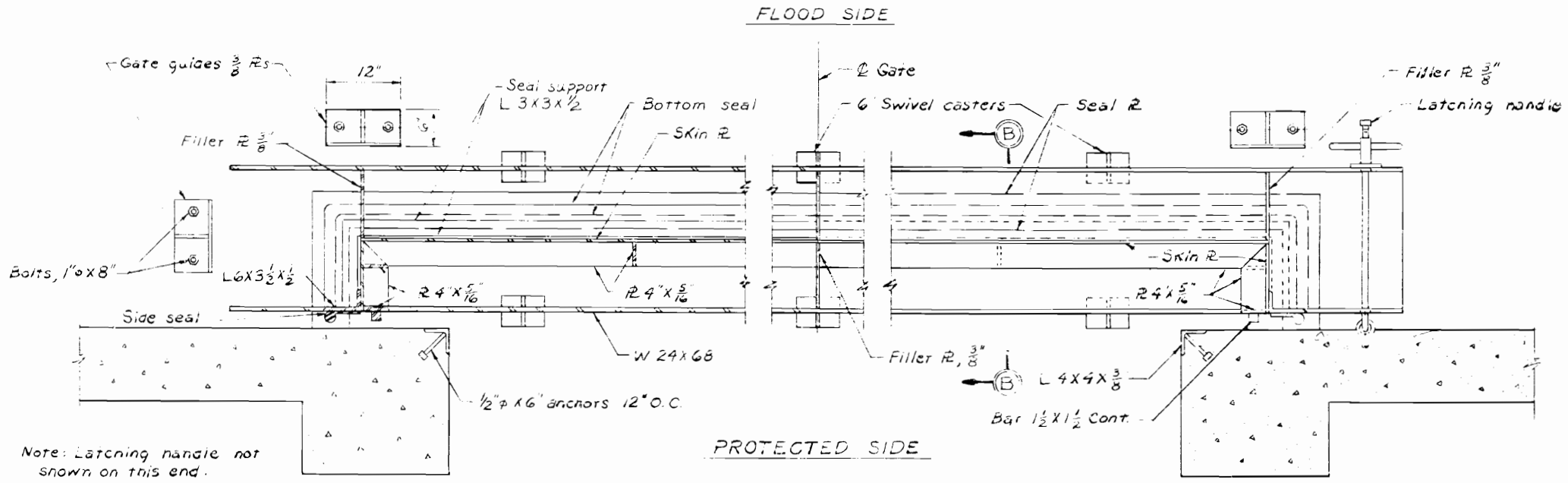

SECTION A-A

Scale: ½" = 1'-0"

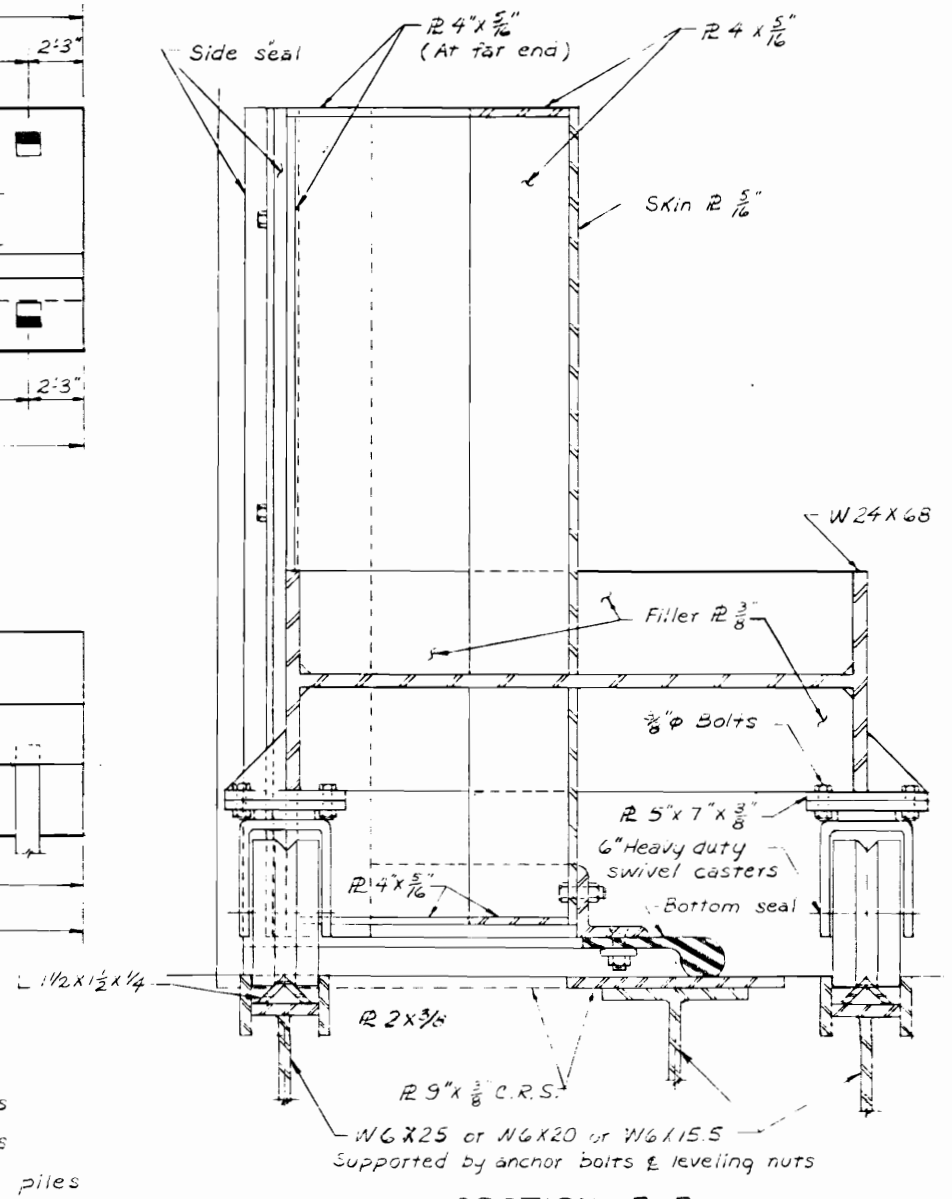

SECTION B-B

Scale: 1½" = 1'-0"

LEGEND

- Vertical piles
- 1 on 4 Batter piles
- 1 on 2 Batter piles
- Existing concrete piles

Note: All piles are 12" x 12" prestressed concrete. Tip El. -54.0

SILL ELEVATION	
GATE No.	ELEVATION "A"
11W	11.00
12W	11.41

LAKE PONTCHARTRAIN, LA. AND VICINITY
LAKE PONTCHARTRAIN BARRIER PLAN
DESIGN MEMORANDUM NO. 2 – GENERAL DESIGN
SUPPLEMENT NO. 8
IHNC REMAINING LEVEES

GATE DETAILS

WEST LEVEE
GATES 11W AND 12W

U. S. ARMY ENGINEER DISTRICT, NEW ORLEANS
CORPS OF ENGINEERS

OCTOBER 1971 FILE NO. H-2-25872

PLATE 15

UNIFIED SOIL CLASSIFICATION

MAJOR DIVISION		TYPE	LETTER SYMBOL	SYMBOL	TYPICAL NAMES
COARSE – GRAINED SOILS More than half of material is larger than No. 200 sieve size.	GRAVELS More than half of coarse fraction is larger than No. 4 sieve size.	CLEAN GRAVEL (Little or No Fines)	GW		GRAVEL, Well Graded, gravel-sand mixtures, little or no fines
			GP		GRAVEL, Poorly Graded, gravel-sand mixtures, little or no fines
		GRAVEL WITH FINES (Appreciable Amount of Fines)	GM		SILTY GRAVEL, gravel-sand-silt mixtures
			GC		CLAYEY GRAVEL, gravel-sand-clay mixtures
	SANDS More than half of coarse fraction is smaller than No. 4 sieve size.	CLEAN SAND (Little or No Fines)	SW		SAND, Well-Graded, gravelly sands
			SP		SAND, Poorly-Graded, gravelly sands
		SANDS WITH FINES (Appreciable Amount of Fines)	SM		SILTY SAND, sand-silt mixtures
			SC		CLAYEY SAND, sand-clay mixtures
FINE – GRAINED SOILS More than half the material is smaller than No. 200 sieve size		SILTS AND CLAYS (Liquid Limit <50)	ML		SILT & very fine sand, silty or clayey fine sand or clayey silt with slight plasticity
			CL		LEAN CLAY; Sandy Clay; Silty Clay; of low to medium plasticity
			OL		ORGANIC SILTS and organic silty clays of low plasticity
		SILTS AND CLAYS (Liquid Limit >50)	MH		SILT, fine sandy or silty soil with high plasticity
			CH		FAT CLAY, inorganic clay of high plasticity
			OH		ORGANIC CLAYS of medium to high plasticity, organic silts
HIGHLY ORGANIC SOILS			Pt		PEAT, and other highly organic soil
WOOD			Wd		WOOD
SHELLS			Sl		SHELLS
NO SAMPLE					

NOTE: Soils possessing characteristics of two groups are designated by combinations of group symbols

DESCRIPTIVE SYMBOLS

COLOR

COLOR	SYMBOL
TAN	T
YELLOW	Y
RED	R
BLACK	BK
GRAY	Gr
LIGHT GRAY	lGr
DARK GRAY	dGr
BROWN	Br
LIGHT BROWN	lBr
DARK BROWN	dBr
BROWNISH-GRAY	br Gr
GRAYISH-BROWN	gy Br
GREENISH-GRAY	gn Gr
GRAYISH-GREEN	gy Gn
GREEN	Gn
BLUE	Bl
BLUE-GREEN	Bl Gn
WHITE	Wh
MOTTLED	Mot

CONSISTENCY FOR COHESIVE SOILS

CONSISTENCY	COHESION IN LBS./SQ.FT. FROM UNCONFINED COMPRESSION TEST	SYMBOL
VERY SOFT	< 250	vSo
SOFT	250 - 500	So
MEDIUM	500 - 1000	M
STIFF	1000 - 2000	St
VERY STIFF	2000 - 4000	vSt
HARD	> 4000	H

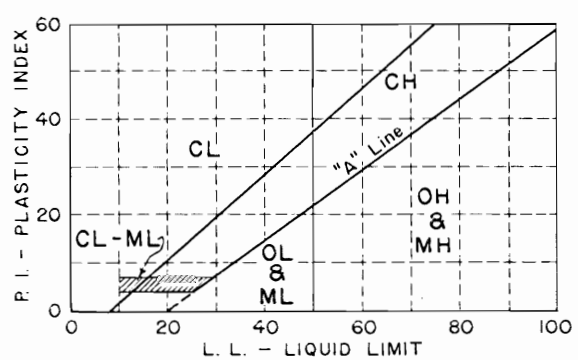

PLASTICITY CHART

For classification of fine - grained soils

MODIFICATIONS

MODIFICATION	SYMBOL
Traces	Tr-
Fine	F
Medium	M
Coarse	C
Concretions	cc
Rootlets	rt
Lignite fragments	lg
Shale fragments	sh
Sandstone fragments	sds
Shell fragments	slf
Organic matter	O
Clay strata or lenses	CS
Silt strata or lenses	SIS
Sand strata or lenses	SS
Sandy	S
Gravelly	G
Boulders	B
Slickensides	SL
Wood	Wd
Oxidized	Ox

NOTES:

FIGURES TO LEFT OF BORING UNDER COLUMN "W OR D_{10}"

Are natural water contents in percent dry weight

When underlined denotes D_{10} size in mm *

FIGURES TO LEFT OF BORING UNDER COLUMNS "LL" AND "PL"

Are liquid and plastic limits, respectively

SYMBOLS TO LEFT OF BORING

▽ Ground-water surface and date observed

(C) Denotes location of consolidation test **

(S) Denotes location of consolidated-drained direct shear test **

(R) Denotes location of consolidated-undrained triaxial compression test **

(Q) Denotes location of unconsolidated-undrained triaxial compression test **

(T) Denotes location of sample subjected to consolidation test and each of the above three types of shear tests **

FW Denotes free water encountered in boring or sample

FIGURES TO RIGHT OF BORING

Are values of cohesion in lbs./sq.ft. from unconfined compression tests

In parenthesis are driving resistances in blows per foot determined with a standard split spoon sampler ($1\frac{3}{8}$" I.D., 2" O.D.) and a 140 lb. driving hammer with a 30" drop

Where underlined with a solid line denotes laboratory permeability in centimeters per second of undisturbed sample

Where underlined with a dashed line denotes laboratory permeability in centimeters per second of sample remoulded to the estimated natural void ratio

* The D_{10} size of a soil is the grain diameter in millimeters of which 10% of the soil is finer, and 90% coarser than size D_{10}.

**Results of these tests are available for inspection in the U.S. Army Engineer District Office, if these symbols appear beside the boring logs on the drawings.

GENERAL NOTES:

While the borings are representative of subsurface conditions at their respective locations and for their respective vertical reaches, local variations characteristic of the subsurface materials of the region are anticipated and, if encountered, such variations will not be considered as differing materially within the purview of clause 4 of the contract.

Ground-water elevations shown on the boring logs represent ground-water surfaces encountered on the dates shown. Absence of water surface data on certain borings implies that no ground-water data is available, but does not necessarily mean that ground water will not be encountered at the locations or within the vertical reaches of these borings.

Consistency of cohesive soils shown on the boring logs is based on driller's log and visual examination and is approximate, except within those vertical reaches of the borings where shear strengths from unconfined compression tests are shown.

REVISION	DATE	DESCRIPTION	BY
3	5-3-71	ADDED UPPER LIMIT LINE (P.I.=0.9(LL-8)) ON PLASTICITY CHART	LMVED-G LETTER D'T'D 29 APRIL 1971
2	6-8-64	SYMBOL FW, NOTE REVISED	ORAL FROM L.M.V.G.G. 5 JUNE 1964
1	9-17-63	1ST PAR. OF GENERAL NOTES REVISED	L.M.V.D MULTIPLE LETTER, DATED 5 SEPT., 1963

SOIL BORING LEGEND

U.S. ARMY ENGINEER DISTRICT, NEW ORLEANS
CORPS OF ENGINEERS
FILE NO. H-2-21800

MODIFICATION OF PROTECTIVE ALIGNMENT
AND PERTINENT DESIGN INFORMATION
IHNC REMAINING LEVEES
WEST LEVEE VICINITY FRANCE ROAD AND FLORIDA AVENUE
CONTAINERIZATION COMPLEX

APPENDIX A
CORRESPONDENCE WITH OTHER AGENCIES

Letter from The Board of Levee Commissioners of the Orleans Levee District dated 15 March 1971 forwarding a letter from the Board of Commissioners of the Port of New Orleans dated 12 March 1971

LMNED-DD letter dated 20 May 1971 to Mr. John McNamara, Chief Engineer of the Board of Levee Commissioners of the Orleans Levee District

523-5042

The Board of Levee Commissioners

OF THE

Orleans Levee District

200 WILDLIFE AND FISHERIES BUILDING
418 ROYAL STREET

New Orleans, La.
70130

COMMISSIONERS
EDWARD N. LENNOX, PRESIDENT
CLAUDE W. DUKE, PRES. PRO-TEM
WALTER E. BLESSEY
PHILIP C. CIACCIO
CHARLES C. DEANO
BENJAMIN J. JOHNSON
VICTOR H. SCHIRO

PROTECTING YOU AND YOUR FAMILY

A. L. WILLOZ, CHIEF ENGINEER AND SECRETARY

15 March 1971

Mr. Jerome C. Baehr
Chief, Engineering Division
Department of the Army
New Orleans District
Corps of Engineers
P. O. Box 60267
New Orleans, La. 70160

Dear Mr. Baehr:

Enclosed is a copy of a letter dated March 12, 1971, from Centerport, addressed to this Board, which commits the Board of Commissioners of the Port of New Orleans to bear the additional costs resulting from flood protection alignment changes at their France Road Terminal on the Inner Harbor Navigation Canal.

Very truly yours,

John P. McNamara

JOHN P. MC NAMARA
CHIEF ENGINEER & ASS'T. SECRETARY

JPMcN:mgl

Attachment

cc: Hon. Edw. N. Lennox, Pres.

NEW ORLEANS CENTROPORT U.S.A.

March 12, 1971

The Board of Levee Commissioners
of the Orleans Levee District
200 Wildlife and Fisheries Building
418 Royal Street
New Orleans, Louisiana 70130

Attention: John P. McNamara
Chief Engineer & Asst. Secretary

Subject: LEVEE IN VICINITY OF FRANCE ROAD AND FLORIDA AVENUE

Gentlemen:

Recent correspondence and conferences with your office and that of the New Orleans District, Corps of Engineers, have been devoted to our request for consideration of constructing subject levee thru France Road Terminal along the alignment of the existing interim levee. We now request that this be done and express our willingness to bear the cost of additional engineering resulting from the various alignment changes that this Board has requested. We are also willing to bear the cost of floodgates at the two ramp approaches to the Berth 1 Wharf. We understand your estimate for additional engineering is approximately $102,000 and for the two gates is approximately $90,000.

We also understand, as determined in a recent meeting with Corps of Engineers personnel, that the levee on the north side of Berth 1, France Road Terminal, will generally require an 80' right of way, and that its centerline will be located 3.5' north of the existing centerline. In this connection, this Board is willing to assure that the elevation of the ground on both sides of the levee will be maintained at or above the elevations shown in the cross section titled, "Sta. 211+181 to Sta. 226+44" on the U. S. Army Engineers drawing, file number H-2-24111, titled "Lake Pontchartrain, La. and Vicinity - Lake Pontchartrain Barrier Plan - Design Memorandum No. 2 - General Design Supplement No. 8 - IH-NC Remaining Levees - Design Sections - West Levee," and dated February 1968.

We thank you for your cooperation in this matter and ask that you confirm the understandings as hereinabove expressed.

Yours very truly,

Edward S. Reed
Executive Port Director
and General Manager

cc: Colonel Herbert R. Haar, Jr.
District Engineer
U.S. Army Engineers District,
New Orleans, La.
Hon. Edward N. Lennox, President
The Board of Levee Commissioners
of the New Orleans District

LMNED-DD 20 May 1971

Mr. John McNamara, Chief Engineer
The Board of Levee Commissioners
of the Orleans Levee District
200 Wild Life and Fisheries Building
418 Royal Street
New Orleans, Louisiana 70130

Dear Mr. McNamara:

Please refer to your letter of 15 March 1971 forwarding to us the Board of Commissioners of the Port of New Orleans (Dock Board) letter to you of 12 March 1971 concerning the realignment of the proposed floodwall in the vicinity of France Road and Florida Avenue.

We concur with the proposals as outlined in the Dock Board's letter, referenced above, in which they agree to bear the cost of additional engineering resulting from the many alignment changes and their willingness to bear the cost of floodgates at the two ramp approaches to Berth 1 Wharf. On this basis, we are proceeding with the preparation of the Design Memorandum which will be subject to the approval of higher authority.

It is important to note that, among the costs attributable to additional engineering, the cost of designing an I-type floodwall (in lieu of the T-type floodwall previously planned) is only an estimate and the exact cost will be determined upon completion of the design. Also, the additional cost of constructing roller-type gates and gate monoliths which cross the two ramps leading to the Dock Board's wharf is an estimate only and the final cost will be determined after the gates and gate monoliths are constructed.

The alignment drawings developed for the Design Memorandum indicate that the levee will extend under the southwest end of the wharf. It will be necessary to acquire right-of-way under the western side of the wharf

extending approximately 10 feet under the south end of the wharf. The exact right-of-way requirements will be determined after the wall design is completed. After obtaining the right-of-way from the Dock Board, your District should issue a permit to the Dock Board, subject to the U. S. Army Corps of Engineers approval, for the portion of the wharf within the limits of the right-of-way.

We hope this correspondence will be beneficial to you in your future planning. If there are any additional confirmations necessary, please feel free to call upon us.

Sincerely yours,

JEROME C. BAEHR
Chief, Engineering Division

MODIFICATION OF PROTECTIVE ALIGNMENT
AND PERTINENT DESIGN INFORMATION
IHNC REMAINING LEVEES
WEST LEVEE VICINITY FRANCE ROAD AND FLORIDA AVENUE
CONTAINERIZATION COMPLEX

APPENDIX B

DETAILED ESTIMATE OF FIRST COST FOR I-WALL PLAN

COMPARISON OF RECOMMENDED PLAN VERSUS I-WALL PLAN

DETAILED ESTIMATE OF FIRST COST FOR I-WALL PLAN
CONTAINERIZATION COMPLEX
July 1971 price levels

Cost acct. No.	Item No.	Description	Estimated quantity	Unit	Unit price	Estimated amount
					$	$
01		Lands				
	1	West of France Road	1.04	acre	8,000.00	8,320.00
	2	East of France Road	3.84	acre	40,000.00	153,600.00
		Subtotal				161,920.00
		Contingencies 20%±				32,080.00
01		Total cost lands				194,000.00
02		Relocations				
	3	16" gas line			L.S.	5,515.00
	4	16" water line			L.S.	1,950.00
	5	Construct manhole and relocate drain pipe			L.S.	250.00
	6	Remove and replace N.O.P.B. railroad			L.S.	262.00
	7	France Road ramp			L.S.	46,793.00
		Subtotal				54,770.00[1]
		Engineering & design 11.7%± (based on estimate of actual work required)				6,400.00
		Supervision & administration 8.8%± (based on estimate of actual work required)				4,830.00
02		Total cost relocations				66,000.00

[1]This amount represents the actual cost of relocations which have been completed by the OLD.

Cost acct. No.	Item No.	Description	Estimated quantity	Unit	Unit price $	Estimated amount $
		Construction				
11		Levees and floodwalls				
	8	Levee fill	40,000	cu.yd.	3.50	140,000.00
	9	Z-27 steel sheet piling	27,000	s.f.	5.00	135,000.00
	10	12"x12" prestressed concrete piling	2,200	l.f.	8.50	18,700.00
	11	Concrete in stabilization slab	10	cu.yd.	45.00	450.00
	12	Concrete in T-wall base	65	cu.yd.	45.00	2,925.00
	13	Concrete in walls and columns	700	cu.yd.	80.00	56,000.00
	14	Portland cement	1,050	bbl.	6.00	6,300.00
	15	Reinforcing steel	58,700	lb.	0.18	10,566.00
	16	Waterstop (3 bulb type)	510	l.f.	4.00	2,040.00
	17	Waterstop (L-type)	100	l.f.	4.00	400.00
	18	Expansion joint filler	690	s.f.	1.00	690.00
	19	Gate seals	40	l.f.	7.50	300.00
	20	Structural steel	5,910	lb.	1.00	5,910.00
	21	Structural excavation	700	cu.yd.	3.50	2,450.00
	22	Structural backfill	400	cu.yd.	2.50	1,000.00
	23	Fertilizing and seeding	3.27	acre	200.00	654.00
	24	Clearing and grubbing	4.02	acre	500.00	2,010.00
	25	Cutoff trench	2,500	cu.yd.	3.50	8,750.00
	26	Hinges	2	ea.	100.00	200.00
		Subtotal				394,345.00
		Contingencies 20%±				78,655.00
11		Levees and floodwalls, total construction cost				473,000.00
30		Engineering and design 12.8%±(based on estimate of actual work req'd)				60,700.00
31		Supervision and administration 10%±(based on estimate of actual work req'd)				47,300.00
		Total cost levees and floodwalls				581,000.00[2]
		Total cost I-wall plan				841,000.00

[2]This includes $167,785 for work previously accomplished by the OLD.

COMPARISON OF RECOMMENDED PLAN VERSUS I-WALL PLAN
(1 July 1971 price levels)

Cost acct. No.	Description	Recommended plan	I-wall plan	Diff. Recommended Plan--I-wall plan
		$	$	$
01	Lands	194,000	194,000	0
02	Relocations	66,000	66,000	0
11	Levees & floodwalls	552,000	473,000	79,000
30	Engineering & design	65,000	60,700	4,300
31	Supervision & administration	54,000	47,300	6,700
	Total	931,000	841,000	90,000[1]

[1]Local interests have agreed to pay this cost which represents the excess amount required to provide gated structures to the new wharf.

MODIFICATION OF PROTECTIVE ALIGNMENT
AND PERTINENT DESIGN INFORMATION
IHNC REMAINING LEVEES
WEST LEVEE VICINITY FRANCE ROAD AND FLORIDA AVENUE
CONTAINERIZATION COMPLEX

APPENDIX C
DESIGN CALCULATIONS

LAKE PONTCHARTRAIN LA. & VICINITY
LAKE PONTCHARTRAIN BARRIER PLAN
IHNC REMAINING LEVEES
WEST LEVEE VICINITY FRANCE ROAD
AND FLORIDA AVENUE
RAMP GATES

July 71
Comp. By. T.F.P.

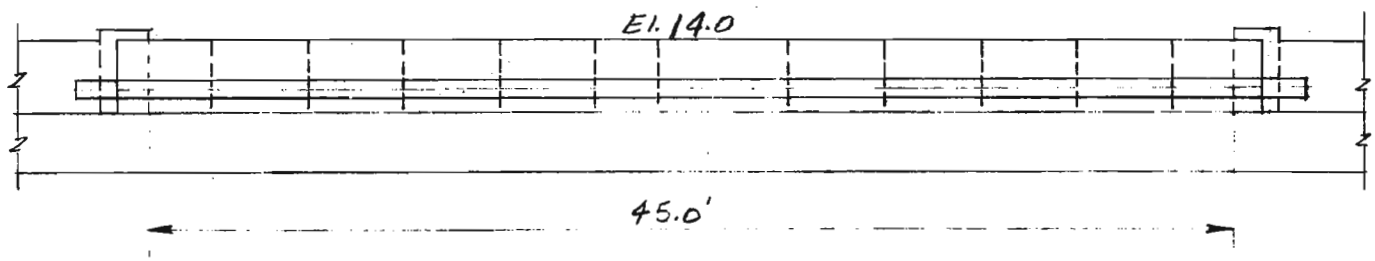

FLOOD SIDE ELEVATION

Scale: 1/8" = 1'-0"

FIG. C-1

LAKE PONTCHARTRAIN, LA. & VICINITY
LAKE PONTCHARTRAIN BARRIER PLAN
INC. REMAINING LEVEES
WEST LEVEE VICINITY FRANCE ROAD
AND FLORIDA AVENUE
RAMP GATES

July 71
Comp. By T.F.P.
Ckd. By MGM.

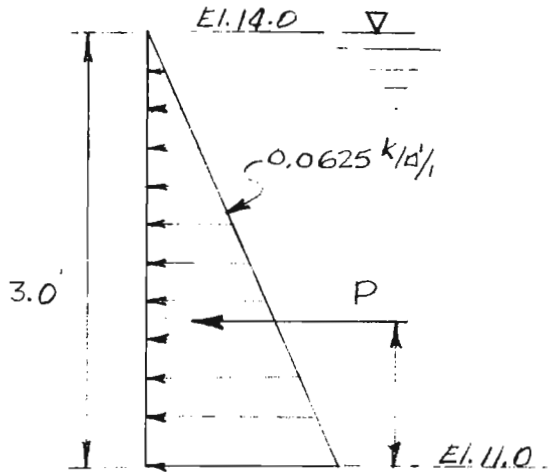

$P = \frac{1}{2} \gamma h^2$

$= 0.5 \times 0.0625 \times 3^2$

$= 0.281$ k/1

$M = \frac{wl^2}{8}$

$= \frac{0.281 \times 45^2}{8}$

$= 71.13$ 'k $= 853{,}538$ "#

GIRDER DESIGN

$S = \frac{M}{f_s} = \frac{853{,}538}{20{,}000} = 42.68 \text{ in}^3$

USE 24 WF 68 $I_x = 1814.5$

$S_x = 153.1$

$f_x = \frac{M}{S_x} = \frac{853{,}538}{153.1} = 5575$ psi.

$F_b = \frac{10{,}000{,}000}{l\,(d/A_f)} = \frac{10{,}000{,}000}{(22.5 \times 12)(4.55)} = 8140$ psi. $>$ 5575 psi.

$\Delta = \frac{5wl^3}{384EI} = \frac{(5)(12.65^k)(45 \times 12)^3}{(384)(29 \times 10^6)(1814.5)} = \frac{(5)(12.65 \times 10^3)(15.75 \times 10^7)}{(384)(2.9 \times 10^7)(1.815 \times 10^3)}$

Brace Girder at Midpoint $= 0.49'' < l/360 = 1.50''$

SKIN PLATE DESIGN

USE 5/16" PL $I = \frac{b \times h^3}{12} = \frac{11 \times (0.3125)^3}{12} = 0.028 \text{ in}^4$

$S = \frac{I}{c} = \frac{0.028}{0.156} = 0.179 \text{ in.}^3$

$M = Sf$

$= 0.179 \times 20{,}000$

$= 3580$ "#

$l^2 = \frac{M \times 10}{w}$

$= \frac{3580 \times 10}{13.25}$

$l = 52$ in.

$w = \frac{159}{12}$ #/1 $= 13.25$ #/"

USE SUPPORTS AT 48" o.c.

FIG. C-2

LAKE PONTCHARTRAIN, LA. & VICINITY
LAKE PONTCHARTRAIN BARRIER PLAN
IHNC REMAINING LEVEES
WEST LEVEE VICINITY FRANCE ROAD
AND FLORIDA AVENUE
RAMP GATES

July 71
Comp. By T.F.P.
Chd By M.C.M.

$$M = \frac{wl^2}{10} = \frac{0.159 \times 4^2 \times 12}{10} = 3.053''^k$$

$$f_b = \frac{M}{S} = \frac{3053}{0.179} = 17{,}056 \text{ psi.} < 29{,}000 \text{ psi.}$$

DESIGN OF VERTICALS

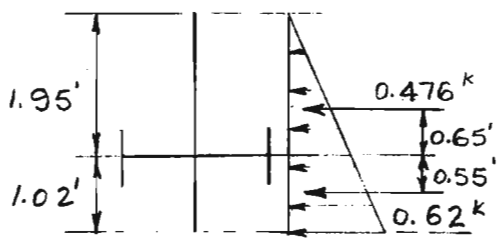

$$\Sigma M_{web} = 0.476 \times 0.65 = 0.31'^k$$
$$= 0.62 \times 0.55 = 0.34'^k$$

$$M = 0.34 \times 12{,}000 = 4080''\#$$

$$S = \frac{M}{f} = \frac{4080}{18{,}000} = 0.23 \text{ in}^3$$

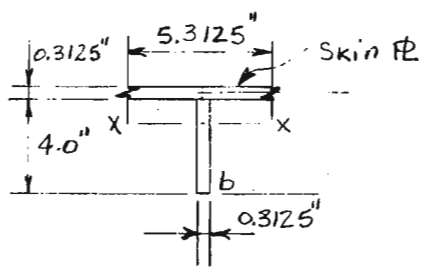

$$\Sigma M_b = 4 \times 0.3125 = 1.25'' \times 2 = 2.50$$
$$5.3125 \times 0.3125 = 1.66 \times 4.1563 = 6.90$$
$$2.91 \qquad 9.40$$

$$\bar{y} = \frac{9.40}{2.91} = 3.23''$$

$$I_{xx} = \frac{0.3125 \times 4^3}{12} = 1.67$$
$$= 1.25 \times 1.23^2 = 1.89$$
$$= \frac{5.3125 \times 0.3125^3}{12} = 0.01$$
$$= 1.66 \times 0.93^2 = 1.44$$
$$5.01$$

$$S_x = \frac{I_x}{c} = \frac{5.01}{3.23} = 1.55 \text{ in}^3$$

$$f = \frac{M}{S} = \frac{4080}{1.55} = 2632 \text{ psi.}$$

CHECK OVERTURNING OF GATE BY WIND (USE 30 psf)

$$\Sigma M_{wheel} = 68 \times 1.0 = 68.0 \quad \text{WF}$$
$$36.1 \times 1.0 = 36.1 \quad \text{SKIN PL}$$
$$104.1$$
$$-90 \times 1.0 = -90.0$$
$$14.1 \quad \text{O.K.}$$

FIG. C-3

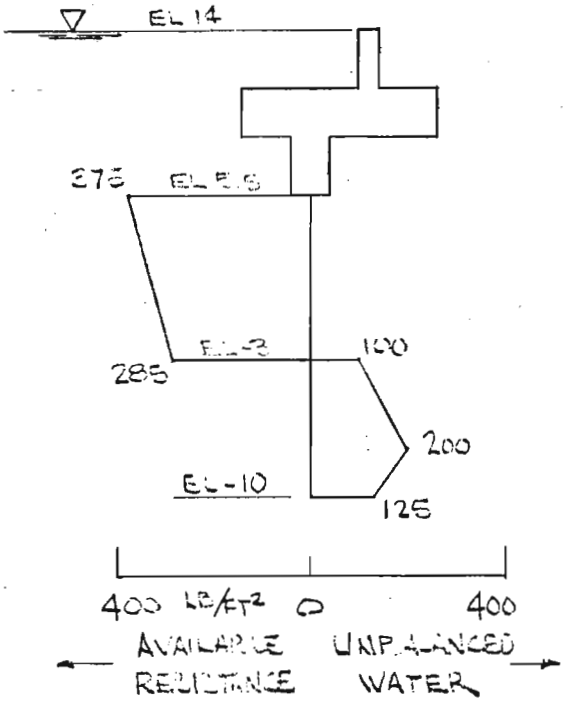

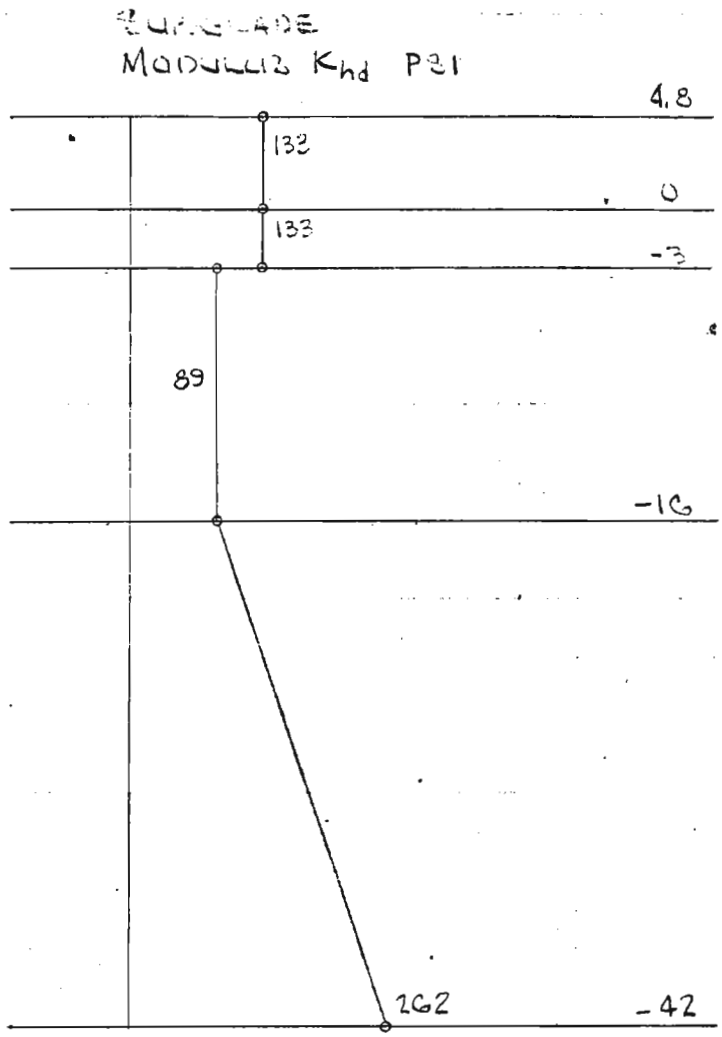

FIG. C-4

IHNC NEAR FLORIDA AVE

GATE AT CONTAINER PIER

SHEET PILE CUTOFF
SUBGRADE MODULUS

LAKE PONTCHARTRAIN, LA. & VICINITY
LAKE PONTCHARTRAIN BARRIER PLAN
INNC REMAINING LEVEES
WEST LEVEE VICINITY FRANCE ROAD
AND FLORIDA AVENUE

July 71
Comp. By T.F.P.

GATED STRUCTURE

60 Ft. Monolith

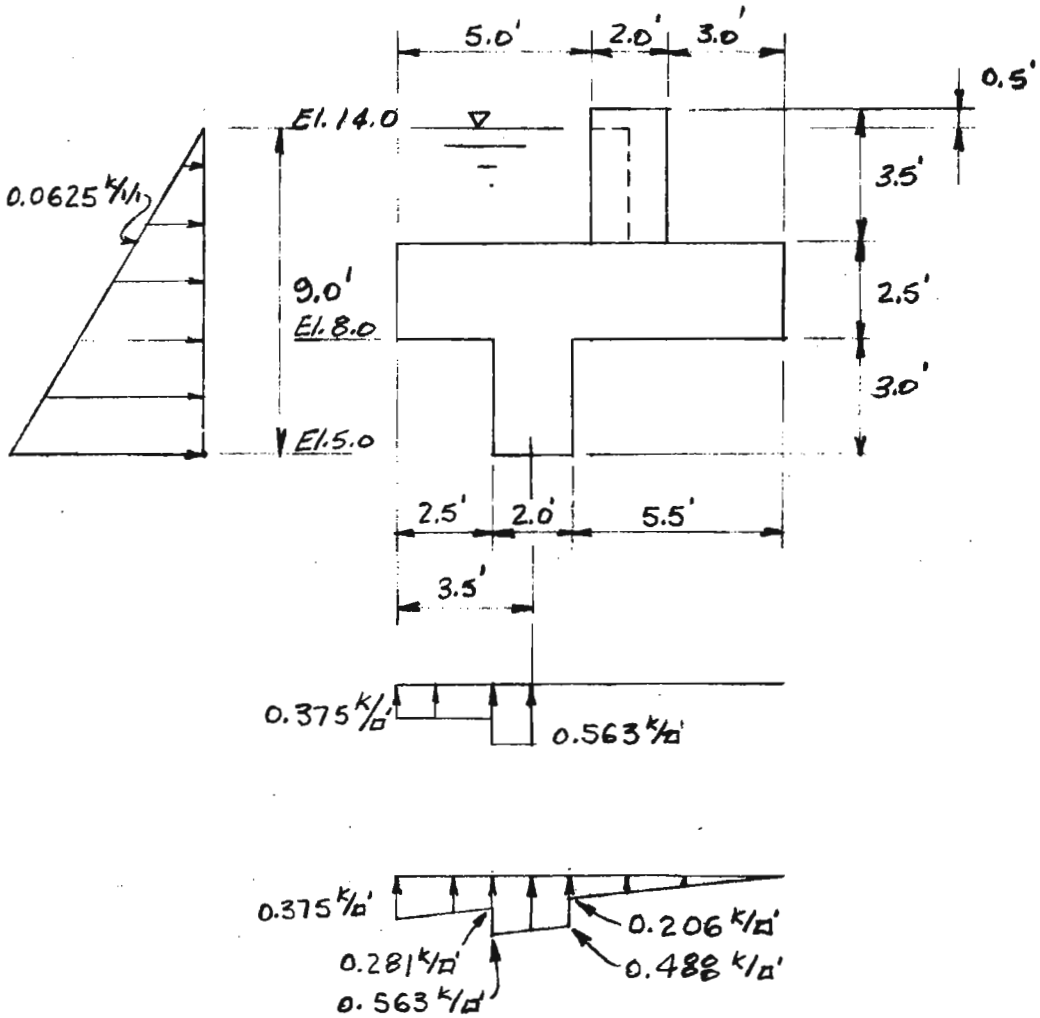

FIG. C-5

Gated structure Cont'd

July 71
Comp. By T.F.P.
Ckd By MCM

Item	Computation	Weight	Arm	Moment
Footing	10X2.5X60X0.15	225.0	5.0	1125.0
"	2X3X60X0.15	54.0	3.5	189.0
Columns	2X2X3.5X0.15X2	4.2	6.0	25.2
Wall	1X3X11X0.15	5.0	5.5	27.5
Gate		6.1	4.0	24.4
Water	4X60X3X0.0625	45.0	2.0	90.0
	1X3X13X0.0625	2.4	4.5	10.8
		341.7		1491.9
Uplift 1	0.375X2.5X60	- 56.3	1.25	- 70.4
	0.563X1.0X60	- 33.8	3.0	- 101.4
Σ Total ①		251.6		1320.1
Uplift 2	½X10X0.375X60	-112.5	3.33	-375.0
	0.282X2X60	- 33.8	3.5	- 118.3
Σ Total ②		195.4		998.6
Horizontal ③	½X0.0625X9²X60	151.9	3.0	455.7

I.

	ΣM	ΣV	ΣH
Imp.	1775.8'k	251.6k	151.9k
Perv.	1454.3	195.4	151.9

Wheel loads on structure

H-20, S-16 (AASHO Spec's)

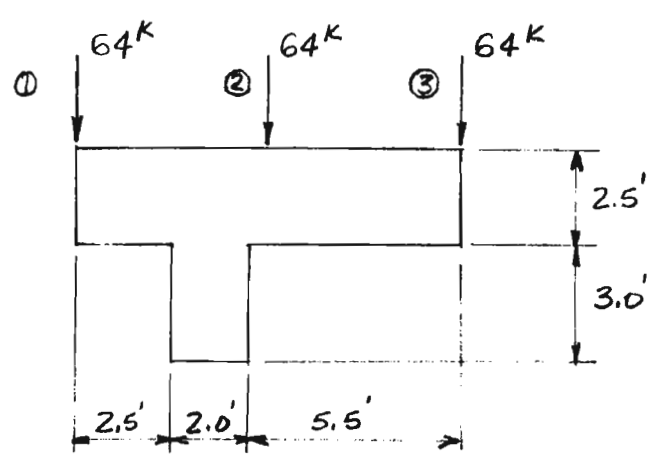

FIG. C-6

Gated structure Cont'd

July 71
Comp. By T.F.P.

Item	Weight	Arm	Moment
Footing	288.2		1366.7
Wheel loads ①	64.0	0.0	0.0
②	64.0	5.0	320.0
③	64.0	10.0	640.0

II.	ΣM	ΣV	ΣH
	1366.7	352.2	0
	1686.7	352.2	0
	2006.7	352.2	0

Total No. of Cases I & II

	ΣM	ΣV	ΣH
1	1776	252	152
2	1454	195	152
3	1367	352	0
4	1687	352	0
5	2007	352	0

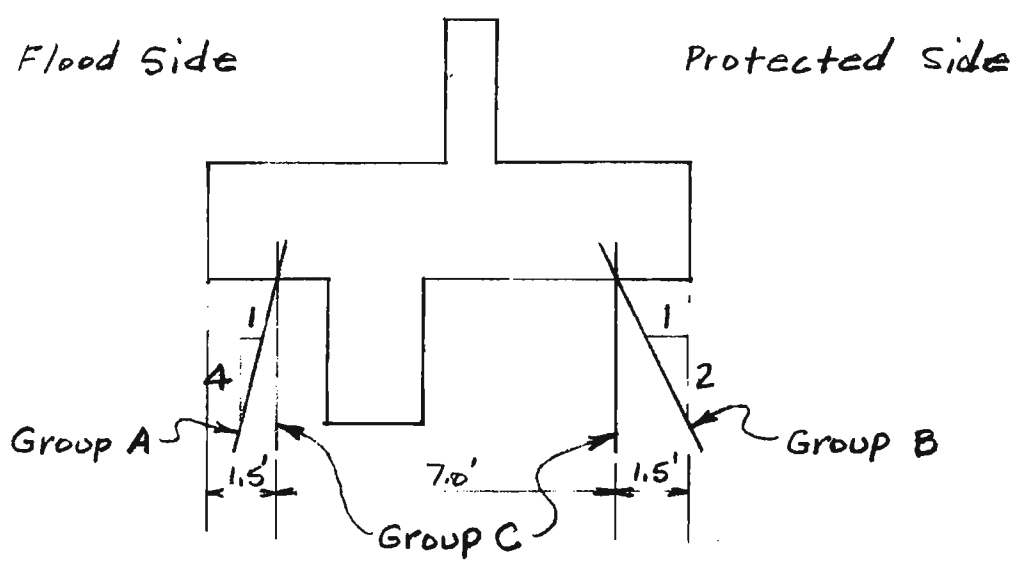

FIG. C-7

Gated structure Cont'd

July 71
Comp. By T.F.P.

Computed pile loads from preceding Cases I & II

Row No.	Comp. Loads Kips	Allow Loads Kips	Percent Load	Case No.	No. Piles /Row
		Group A			
1	P = -28.47	43.0	66.220	2	4
	Q = -1.333	3.387	39.337	1	
		Group B			
1	P = -37.22	43.0	86.552	2	6
	Q = -1.384	2.954	46.868	1	
		Group C			
1	P = 33.20	90.0	36.893	3	5
	Q = -1.330	4.602	28.896	1	
2	P = 78.91	90.0	87.683	1	5
	Q = -1.330	2.414	55.097	1	

Assume 3' width

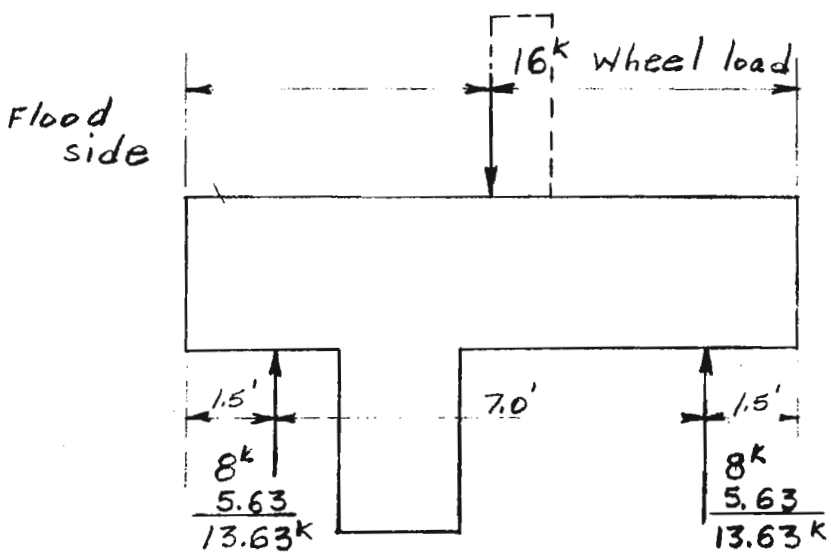

$M_{max} = 3.5 \times 8 = 28.0^{'k}$

$= 3.5 \times 5.63 = 19.71$

$47.71^{'k}$

$d = \sqrt{\frac{M}{kb}} = \sqrt{\frac{47.71 \times 12{,}000}{152 \times 36}} = 10.23''$ USE $d = 26''$

$A_s = \frac{M}{f_s j d} = \frac{47.71 \times 12}{20 \times 0.891 \times 26} = 1.24 \div 3 = 0.41^{\square''/'}$

USE # 6 @ 12" Bottom

FIG. C-8

Gated structure Cont'd

July 71
Comp. By T.F.P.
Ckd. By MCM.

3' Longitudinal strip on flood side

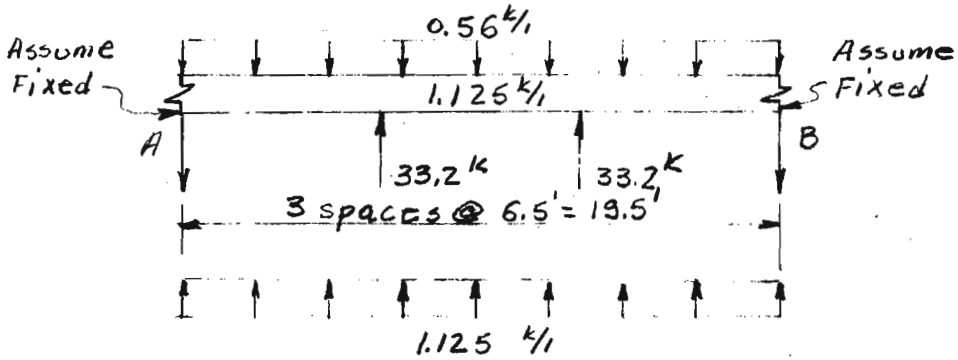

Net loads on structure

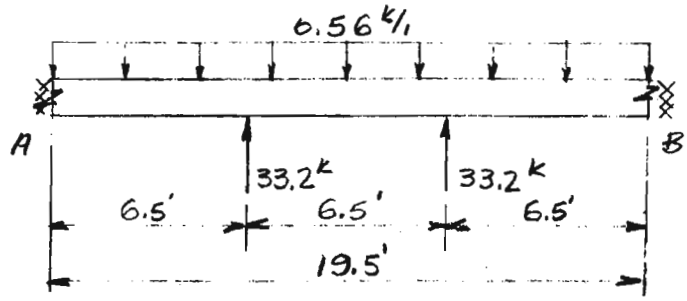

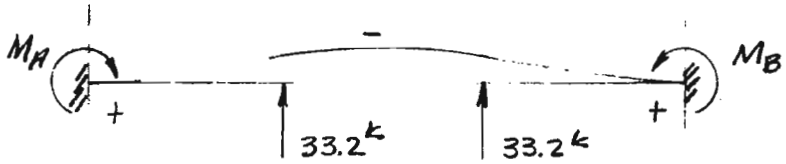

$M_A = M_B = \frac{1}{9} W L = \frac{1}{9} \times 66.4 \times 19.5 = +143.9^{'k}$

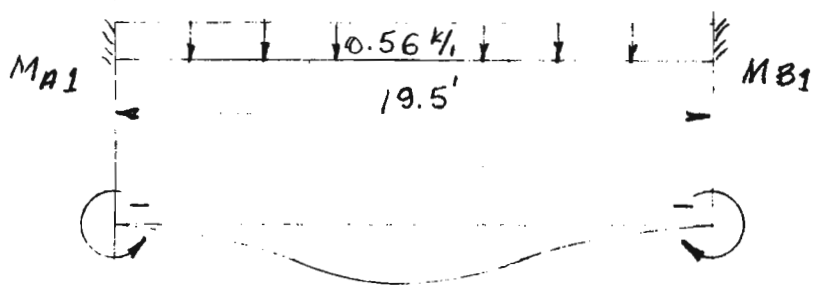

$M_{A1} = M_{B1} = \frac{1}{12} W L = \frac{1}{12}(0.56 \times 19.5)(19.5) = -17.75^{'k}$

$\Sigma M_A + M_{A1} = \Sigma M_B + M_{B1} = +143.9 + (-17.75) = 126.15^{'k}$

FIG. C-9

July 71
Comp. By T.F.P.
Ckd. By M.C.M.

Gated Structures Cont'd

3' Longitudinal strip on flood side

Net loads on structure

$P = -28.47 \times \frac{4}{\sqrt{17}} = 27.6^k$

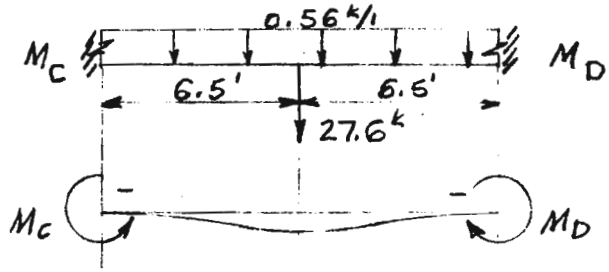

$M_C = M_D = \frac{1}{8} W L = \frac{1}{8} \times 27.6 \times 13 = -44.85'^k$

$= \frac{1}{12} w l^2 = \frac{1}{12} \times 0.56 \times 13^2 = -7.89$

$-52.74'^k$

Max $+M = 126.15'^k$

Max $-M = -52.74'^k$

$d = \sqrt{\frac{M}{k\,b}} = \sqrt{\frac{126.15 \times 12{,}000}{152 \times 36}} = 16.63''$ USE $d = 26''$

$A_s = \frac{M}{f_s\,j\,d} = \frac{126.15 \times 12}{20 \times 0.891 \times 26} = 3.27 \div 3 = 1.09\ \square''/'$

USE #9 @ 12" Bottom

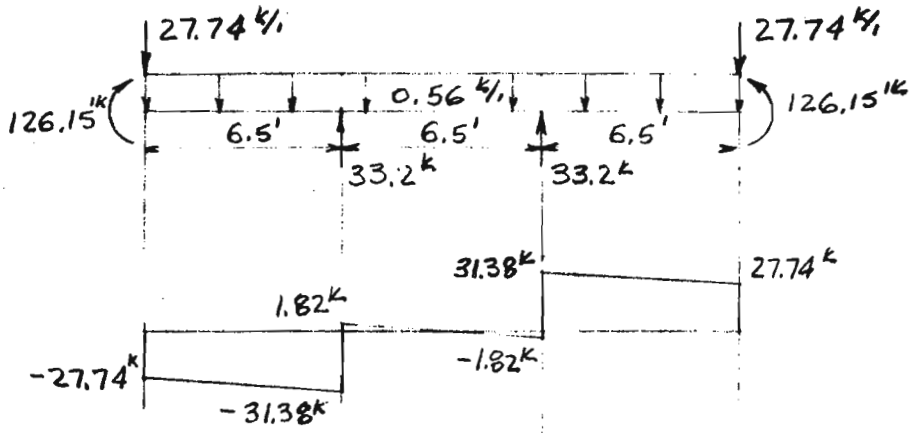

$V = \frac{V}{b\,d} = \frac{31380}{36 \times 26} = 33.5$ psi < 60 psi

$u = \frac{V}{\Sigma_o\,j\,d} = \frac{31{,}380}{10.5 \times 0.891 \times 26} = 129$ psi < 233 psi

$A_s = \frac{M}{f_s\,j\,d} = \frac{52.74 \times 12}{20 \times 0.891 \times 26} = 1.37 \div 3 = 0.46\ \square''/'$

USE #6 @ 12" Top

Top steel in short direction

$A_s = 0.001\,b\,t$

$= 0.001 \times 12 \times 30$

$= 0.36\ \square''/'$ USE #6 @ 12"

FIG. C-10

FLOOD SIDE

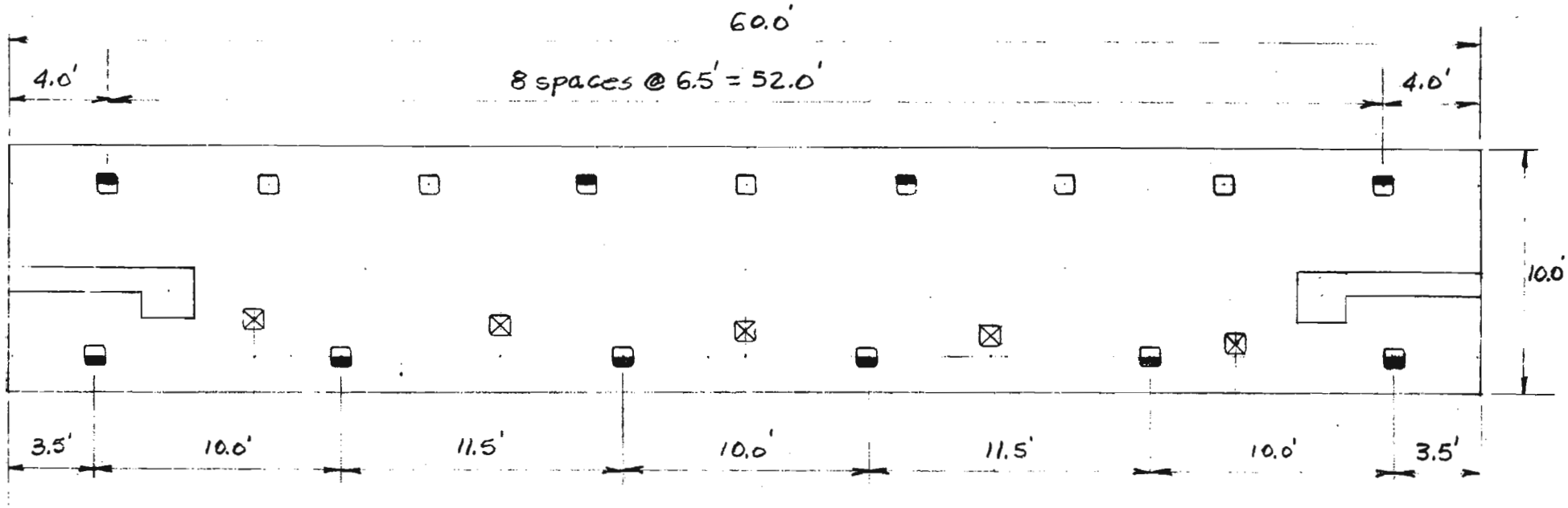

1" = 6'

PROTECTED SIDE

1:4 Batter

1:2 Batter

Vertical piling

Existing Vertical Piling

FIG. C-11

GATED STRUCTURE

49.5 Ft. Monolith
July 71
Comp. By T.F.P.

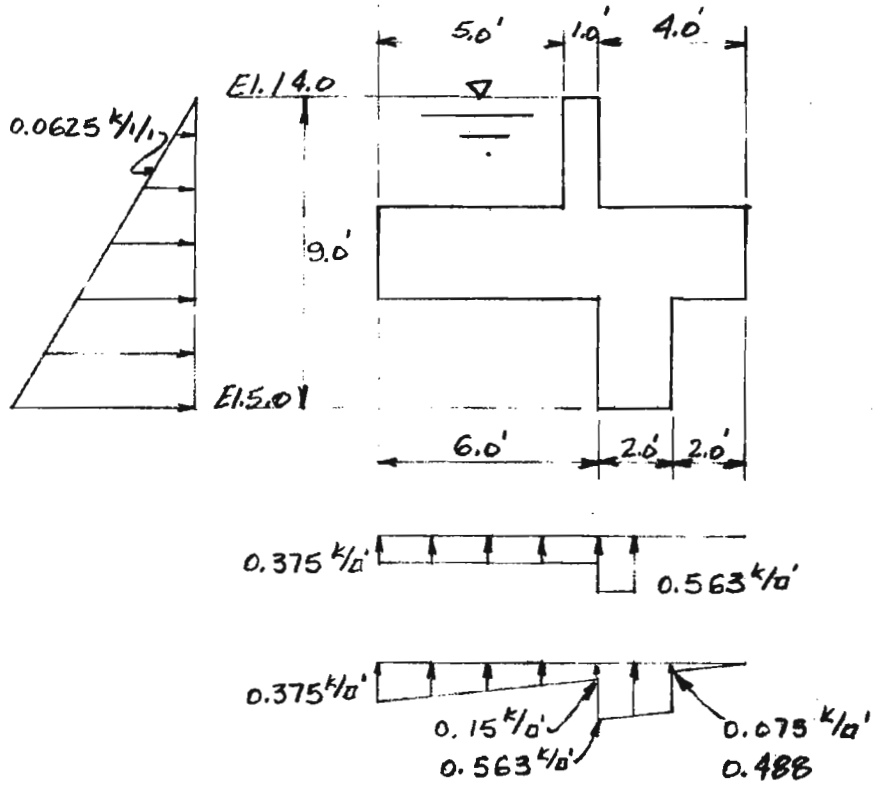

Item	Computation	Weight	Arm	Moment
Footing	10 x 2.5 x 49.5 x 0.15	185.6	5.0	928.0
"	2 x 3 x 49.5 x 0.15	44.6	7.0	312.2
Wall	1 x 3 x 49.5 x 0.15	22.3	5.5	122.7
Water	5 x 3 x 49.5 x 0.0625	46.4	2.5	116.0
		298.9		1478.9
Uplift 1	0.375 x 6 x 49.5	-111.4	3.0	-334.2
	0.563 x 1 x 49.5	-27.9	6.5	-181.4
		159.6		963.3
Uplift 2	1/2 x 10 x 0.375 x 49.5	-92.8	3.33	-309.3
	0.413 x 2 x 49.5	-40.9	7.0	-286.3
		165.2		883.3
Horizontal	1/2 x 0.0625 x 9^2 x 49.5	125.3	3.33	417.7

ΣM	ΣV	ΣH
1381	159.6	125.3
1301	165.2	125.3
1363	252.5	0

FIG. C-12

Gated Structure Con'td

July 71
COMP. By T.F.P.

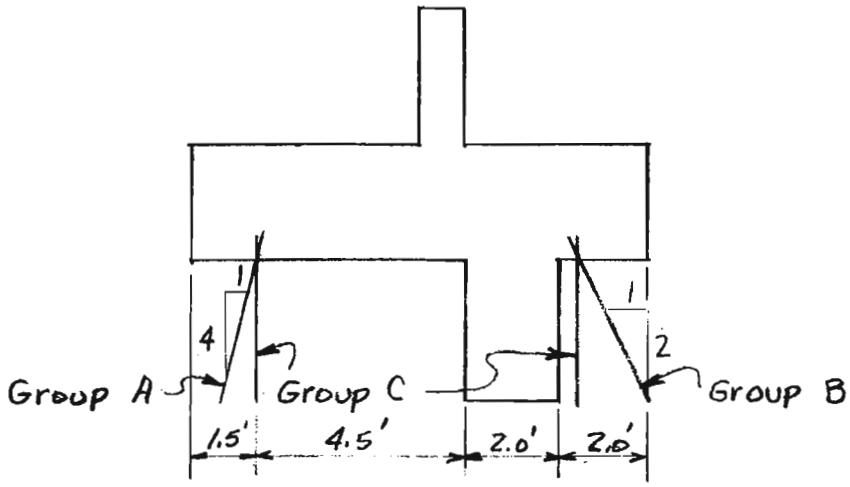

Computed pile loads for storage monolith

Row No.	Comp. Loads Kips	Allow Loads Kips	Percent Load	Case No.	No. Piles /Row
		Group A			
1	P= -27.97	43.00	65.047	1	3
	Q= - 1.207	3.372	35.806	1	
		Group B			
1	P= -39.43	43.00	91.704	2	5
	Q= - 1.237	2.841	43.538	2	
		Group C			
1	P= 28.74	90.00	31.933	2	3
	Q= -1.204	4.737	25.418	2	
2	P= 66.40	90.00	73.778	1	5
	Q= -1.209	2.993	40.391	1	

FIG. C-13

Gated Structures Cont'd

3' Longitudinal strip on flood side

July 71
Comp. By T.F.P.
Ckd. By M.C.M.

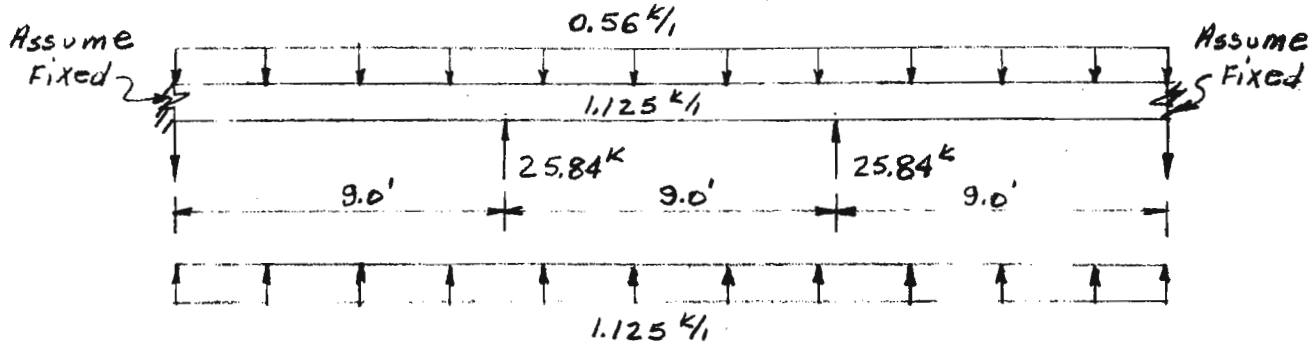

Net loads on structure

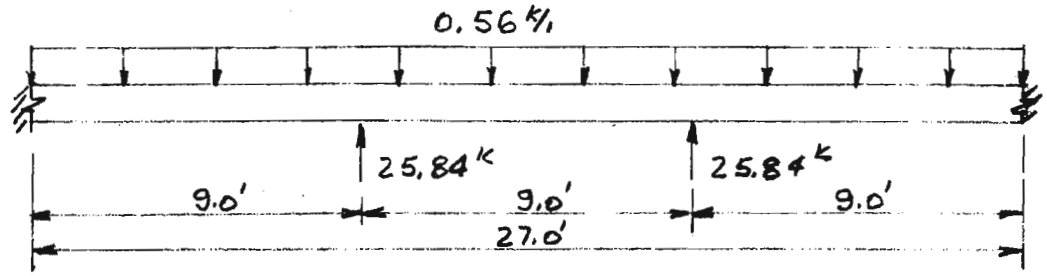

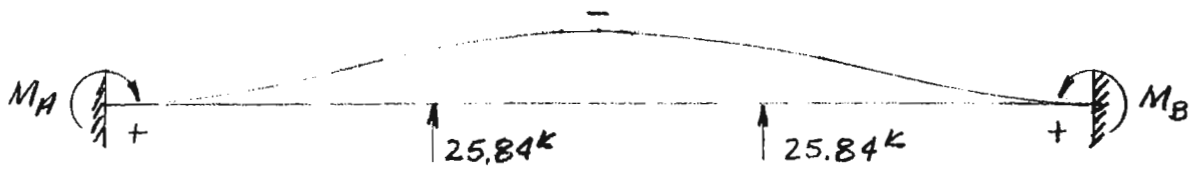

$$M_A = M_B = \frac{1}{9} WL = \frac{1}{9} \times 51.68 \times 27 = 155.04^{'k}$$

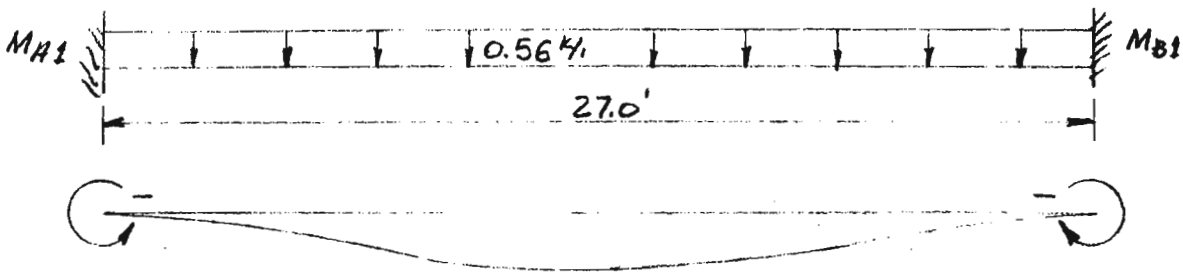

$$M_{A1} = M_{B1} = \frac{1}{12} WL = \frac{1}{12}(0.56 \times 27)(27) = -34.02^{'k}$$

$$\Sigma M_A + M_{A1} = \Sigma M_B + M_{B1} = +155.04 + (-34.02) = 121.02^{'k}$$

FIG. C-14

Gated Structures Cont'd

July 71
Comp. By T.F.P.
Ckd. By M.C.M.

3' longidudinal strip on flood side

Net loads on structure

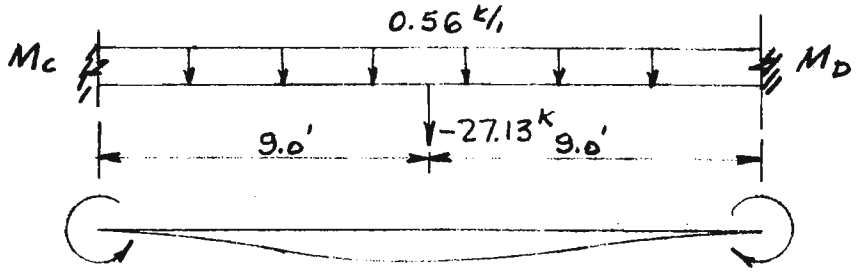

$P = -27.97 \times \frac{4}{\sqrt{17}}$

$= -27.13^k$

$M_c = M_D = \frac{1}{8} WL = \frac{1}{8} \times 27.13 \times 18 = -61.04^{'k}$

$= \frac{1}{12} wL^2 = \frac{1}{12} \times 0.56 \times 18^2 = -15.12$

$-76.16^{'k}$

Max $+M = 121.02^{'k}$

$-M = -76.16$

use $d = 26''$

$A_s = \frac{M}{f_s j d} = \frac{121.02 \times 12}{20 \times 0.891 \times 26} = 3.13^{\square''} \div 3 = 1.04^{\square''}/1$

Use #9 @ 12"

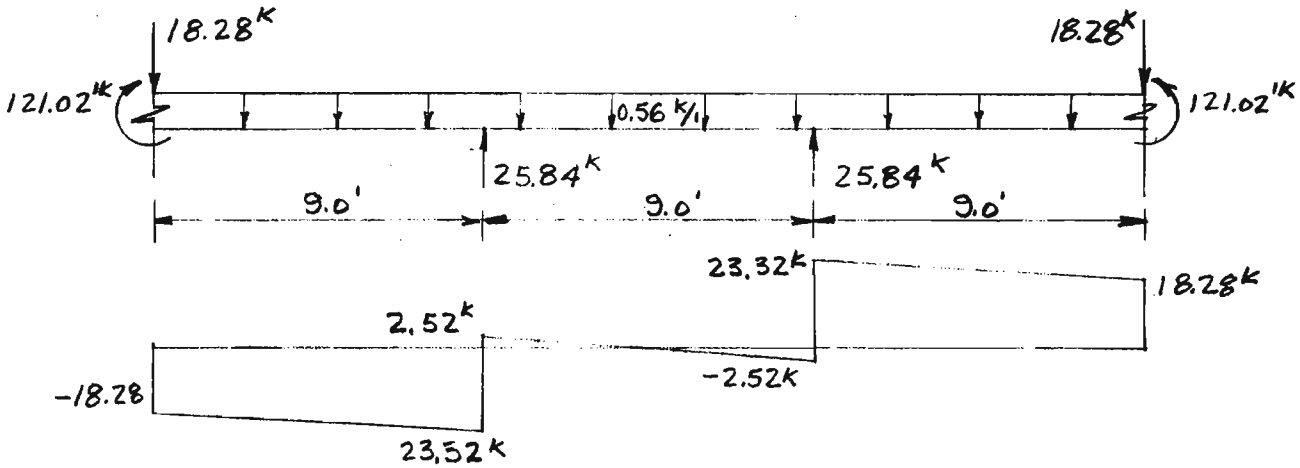

$A_s = \frac{M}{f_s j d} = \frac{76.16 \times 12}{20 \times 0.891 \times 26} = 1.97 \div 3 = 0.66^{\square''}/1$

Use #7 @ 10½"

steel in short direction

$A_s = 0.001\ b\ t$ E.F.

$= 0.001 \times 12 \times 30$

$= 0.36$ USE #6 Top & Bottom

FIG. C-15

FLOOD SIDE

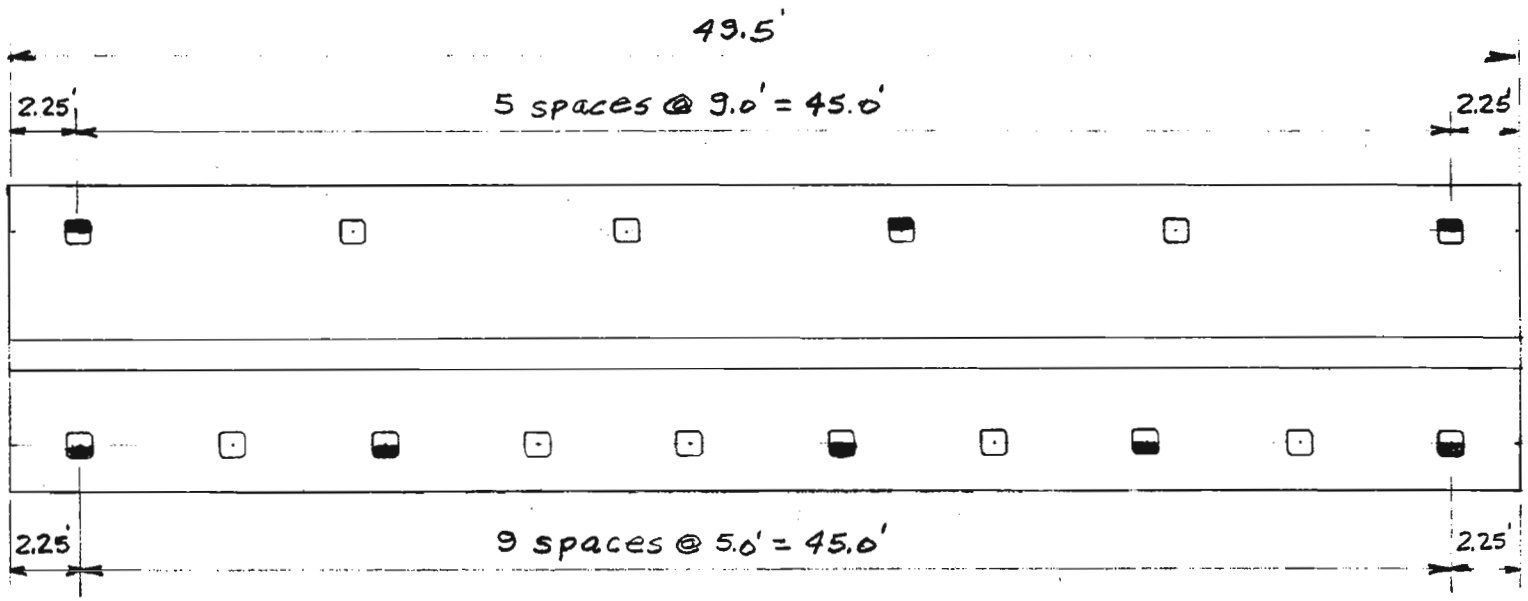

1"=6'

PROTECTED SIDE

- 1:4 Batter
- 1:2 Batter
- Vertical Piling

FIG. C-16

Gated Structures Cont'd

July 71
Comp. By T.F.P.

1 CONTAINERIZATION JOB
2 GATE MONOLITH 60 FT
3 1
10 2 0 1
20 3 3 1
30 1776 252 152
40 12 12 133 70 90 43
50 1 -4 1 -2 2 0
60 1.5 4
70 8.5 6
80 1.5 5 8.5 5
85 0
90 1454 195 152
100 1367 352 0
110 0

NAN	AXX	BATTA	AN
1	1.50	-4.00	4.00
NBN	BXX	BATTB	BN
1	8.50	-2.00	6.00
NCN	CXX	BATTC	CN
2	5.00	0.00	10.00

ROW	DIST	NP/ROW	AXIAL FORCE	TRANS FORCE	
		GROUP A			
1	1.50	4.00	-27.640	-1.3325	
		GROUP B			
1	8.50	6.00	-37.002	-1.3845	1
		GROUP C			
1	1.50	5.00	31.651	-1.3298	
2	8.50	5.00	78.914	-1.3298	
		GROUP A			
1	1.50	4.00	-28.475	-1.2602	
		GROUP B			
1	8.50	6.00	-37.217	-1.3067	2
		GROUP C			
1	1.50	5.00	27.669	-1.2608	
2	8.50	5.00	72.430	-1.2608	
		GROUP A			
1	1.50	4.00	16.944	-0.3821	
		GROUP B			
1	8.50	6.00	-3.518	-0.3793	3
		GROUP C			
1	1.50	5.00	33.264	-0.3480	
2	8.50	5.00	27.544	-0.3480	

FIG. C-17

Gated Structures Cont'd

July 71
Comp. By T.F.P.

1 CONTAINERIZATION JOB
2 STORAGE MONOLITH 49.5 FT.
3 1
10 2 0 1
20 3 3 1
30 1381 160 125
40 12 12 133 70 90 43
50 1 -4 1 -2 2 0
60 1.5 3
70 8.5 5
80 1.5 3 8.5 5
85 1301 165 125
100 1363 253 0
110 0

NAN	AXX	BATTA	AN
1	1.50	-4.00	3.00
NBN	BXX	BATTB	BN
1	8.50	-2.00	5.00
NCN	CXX	BATTC	CN
2	5.87	0.00	8.00

ROW	DIST	NP/ROW	AXIAL FORCE	TRANS FORCE	
		GROUP A			
1	1.50	3.00	-27.970	-1.2074	
		GROUP B			
1	8.50	5.00	-38.413	-1.2454	1
		GROUP C			
1	1.50	3.00	25.842	-1.2089	
2	8.50	5.00	66.401	-1.2089	
		GROUP A			
1	1.50	3.00	-24.944	-1.2066	
		GROUP B			
1	8.50	5.00	-39.433	-1.2371	2
		GROUP C			
1	1.50	3.00	28.740	-1.2040	
2	8.50	5.00	64.817	-1.2040	
		GROUP A			
1	1.50	3.00	11.113	-0.3612	
		GROUP B			
1	8.50	5.00	-1.202	-0.3718	3
		GROUP C			
1	1.50	3.00	26.631	-0.3356	
2	8.50	5.00	29.009	-0.3356	

FIG. C-18

Gated Structures Cont'd

July 71
Comp. By T.F.P.
Ckd. By M.C.M.

WALL DESIGN

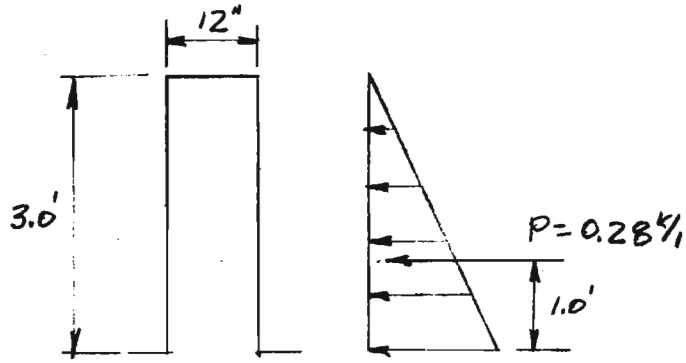

$P = \frac{1}{2} r h^2$

$= 0.5 \times 0.0625 \times 3^2$

$= 0.28$ k/1

$M = 0.28 \times 1.0 = 0.28$ 'K

$d = \sqrt{\frac{M}{kb}} = \sqrt{\frac{0.28 \times 12{,}000}{152 \times 12}} = 1.36''$ USE $d = 9''$

$A_s = \frac{M}{f_s j d} = \frac{0.28 \times 12}{20 \times 0.891 \times 9} = 0.02$ □"/1

Minimum steel

$A_s = 0.0025\, b d$

$= 0.0025 \times 12 \times 9$

$= 0.27$ □"/1 USE #5 @ 12" in F.S.

$A_s = 0.001\, b t$ E.F.

$= 0.001 \times 12 \times 12$

$= 0.14$ □"/1 USE #4 @ 12"

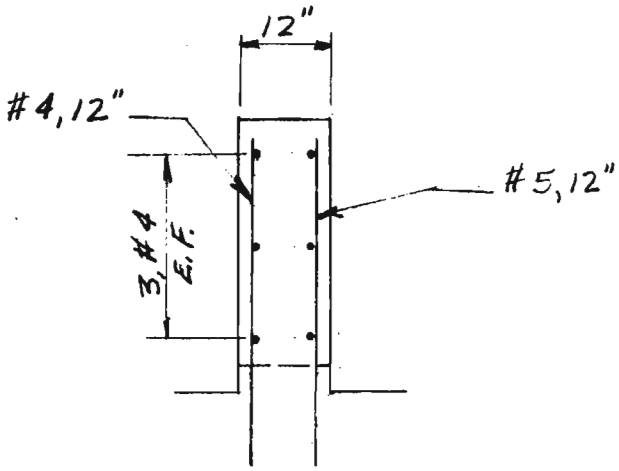

FIG. C-19

Gated Structures Cont'd

COLUMN DESIGN

July 71
Comp. By T.F.P.
Ckd. By M.C.M.

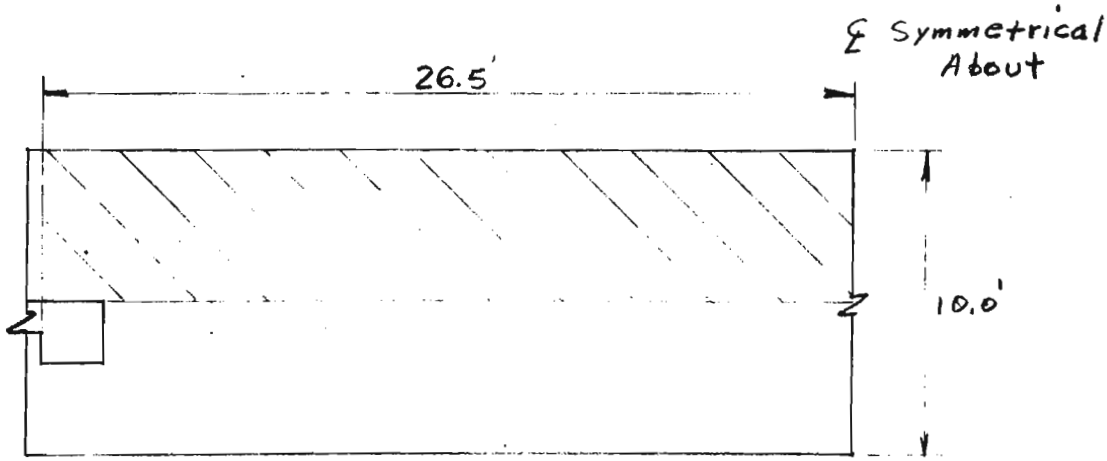

Horizontal Force on column

$H = \frac{1}{2} r h^2 (26.5)$

$= 0.5 \times 0.0625 \times 3^2 \times 26.5$

$= 7.45^{k}$

ΣM (col base) $= 7.45 \times 1 = 7.45^{'k}$

Use $d = 21''$

$A_s = \frac{M}{f_s j d} = \frac{7.45 \times 12}{20 \times 0.891 \times 21} = 0.24^{\square''}$

Minimum steel

$A_s = 0.0025\, bd$

$= 0.0025 \times 24 \times 21$

$= 1.26^{\square''}$

USE 3, #6 E.F.

2 sets #3 ties

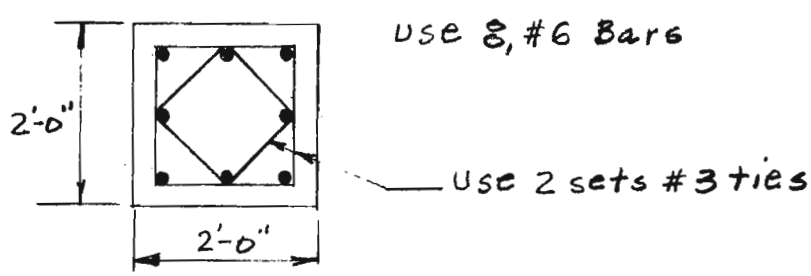

FIG. C-20

Gated Structures Cont'd

July 71
Comp. By T.F.P.
FOUTING EXTENSION
Ckd. By M.C.M

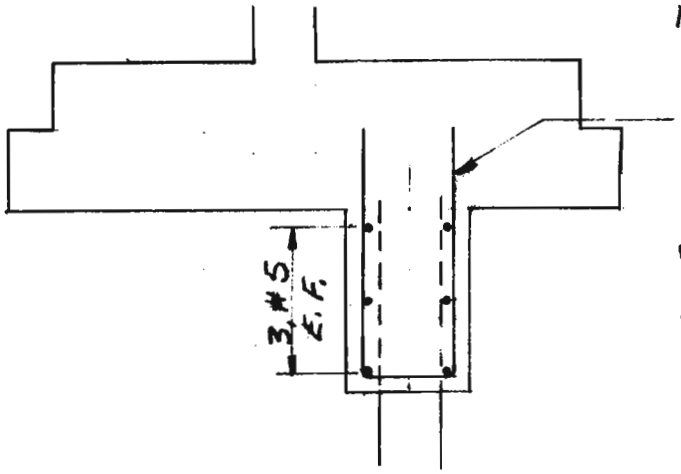

#6 U stirrups @ 24"

Use # 6 U stirrups

$A_v = 0.88^{\square''}$

$S = \frac{A_v}{0.0015b} = \frac{0.88}{0.0015 \times 24} = 24.4''$ ✓

Space @ 24"

Horizontal Steel

$A_s = 0.001\ bd$ E.F.

$= 0.001 \times 24 \times 12$

$= 0.29^{\square''}/_{1}$ ✓ USE 3 #5 in. E.F.

BRACKETS FOR RAMP SUPPORT

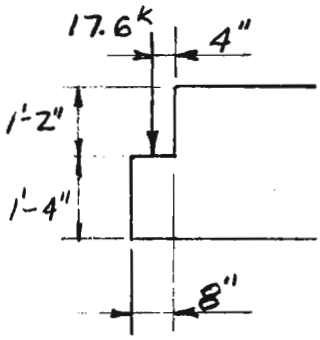

The wheel load shown is assumed to be distributed over a two ft. width.

$M = 17.6 \times 0.33 = 5.8^{'K}$ · Use $d = 13''$

$A_s = \frac{M}{f_s jd} = \frac{5.8 \times 12}{20 \times 0.891 \times 13} = 0.30 \div 2$

$= 0.15^{\square''}/_{1}$ ✓

Use # 6 @ 12"

$v = \frac{V}{bd} = \frac{17{,}600}{24 \times 13} = 56.4\ psi < 60\ psi$ ✓

Assume shear occurs as shown below

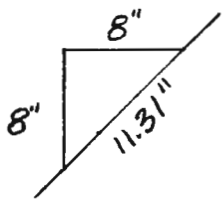

$S = \frac{P}{A} = \frac{17{,}600}{11.31 \times 24} = 64.84\ psi$ ✓

FIG. C-21

PROJECT	Page ___ of ___	COMPUTED BY	DATE
SUBJECT		CHECKED BY	DATE

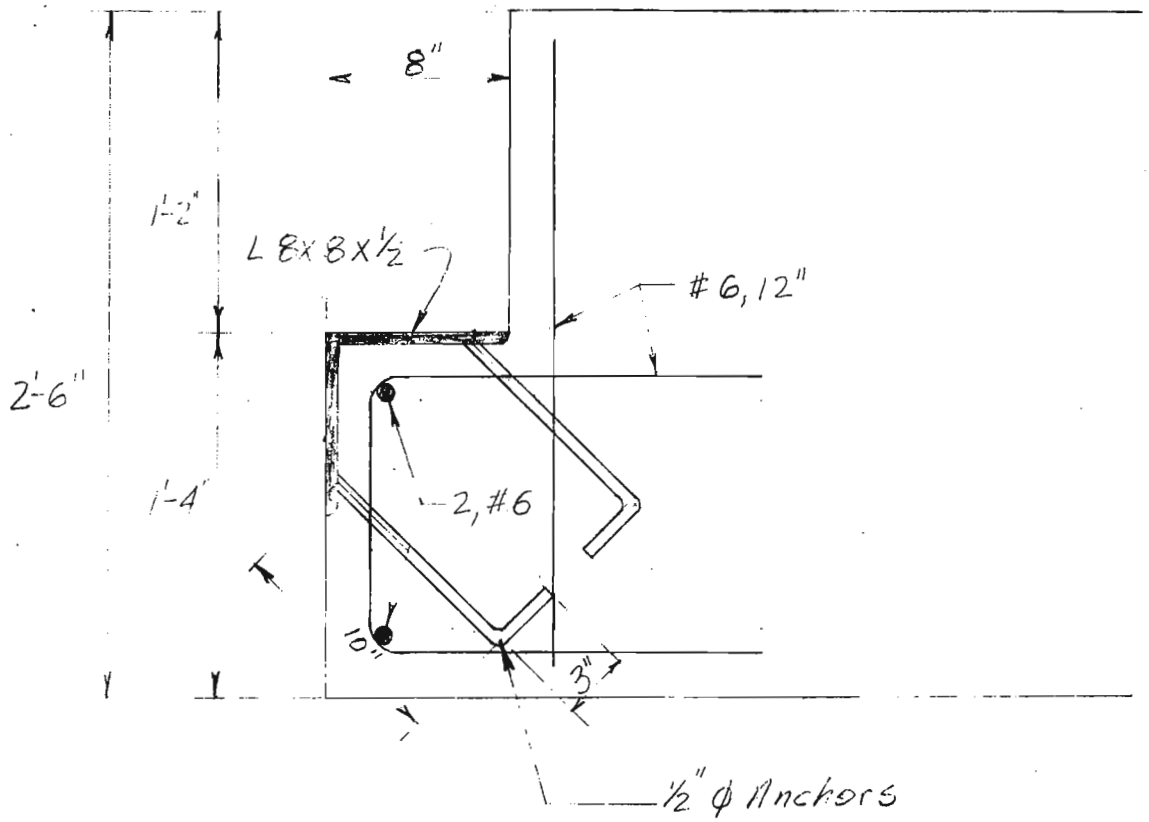

FIG. C-22

60 FT. MONOLITH

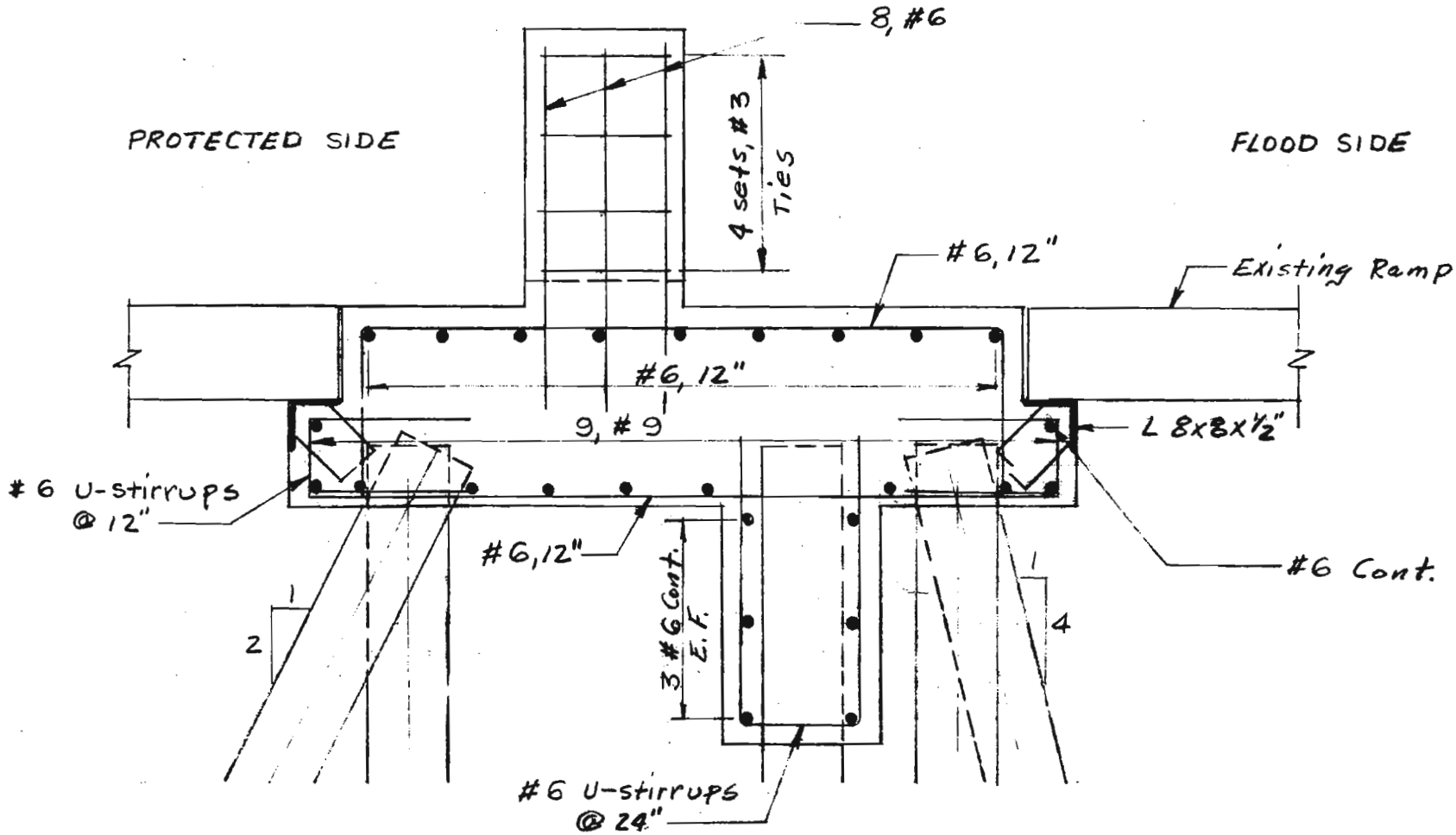

1" = 2'

FIG. C-23

49.5 FT. MONOLITH

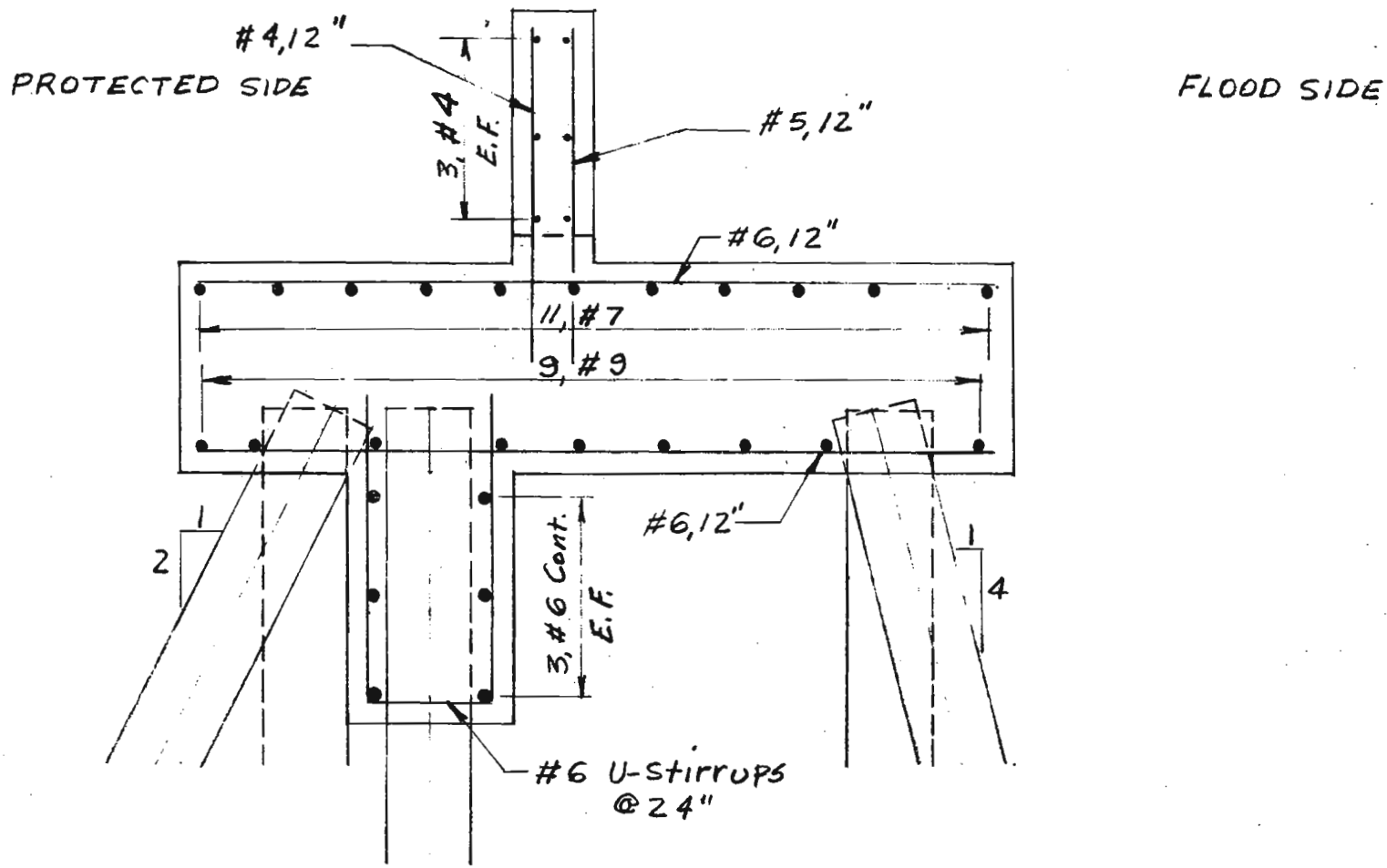

1"=2'

FIG. C-24